Department of the Army
Headquarters, United States Army
Training and Doctrine Command
Fort Eustis, Virginia 23604-5700

***TRADOC Pamphlet 385-1**

6 January 2012

Safety

THE TRADOC MODEL SAFETY PROGRAM AND SELF-ASSESSMENT GUIDE

FOR THE COMMANDER:

OFFICIAL:

JOHN E. STERLING, JR.
Lieutenant General, U.S. Army
Deputy Commanding General/
Chief of Staff

CHARLES E. HARRIS III
Colonel, GS
Deputy Chief of Staff, G-6

History. This publication is a rapid action revision. The portions affected by this administrative revision are listed in the summary of change.

Summary. This pamphlet serves as the basis for doctrine development and organizing, implementing, resourcing, and assessing safety and occupational programs within the U.S. Army Training and Doctrine Command (TRADOC).

Applicability. This pamphlet applies to all TRADOC organizations, activities, centers and schools.

Proponent and exception authority. The proponent of this pamphlet is the TRADOC Deputy Commanding General/Chief of Staff. The proponent has the authority to approve exceptions or waivers to this pamphlet that are consistent with controlling law and regulations. The proponent may delegate this authority in writing, to a division chief with the proponent agency or its direct reporting unit or field-operating agency, in the grade of colonel or the civilian equivalent. To request an exception or waiver to this pamphlet, send a written request to usarmy.jble.tradoc.mbx.tradoc-g1-4-safety-office@mail.mil prior to initiating deviation.

---

*This pamphlet supersedes TRADOC Pamphlet 385-1, 17 March 2009.

Identify specific conflict(s) with pamphlet and provide justification for the request and alternate measures. Include an assessment of the associated risk with the request.

Suggested improvements. Users are invited to send comments and suggested improvements on DA Form 2028 (Recommended Changes to Publication and Blank Forms) directly to Commander, TRADOC (ATCS-S), 950 Jefferson Ave, Fort Eustis, VA 23604-5754 or usarmy.jble.tradoc.mbx.tradoc-g1-4-safety-office@mail.mil. Suggested improvements may also be submitted using DA Form 1045 (Army Ideas for Excellence Program (AIEP) Proposal).

Distribution. This pamphlet is available only on the TRADOC Homepage at http://www.tradoc.army.mil/tpubs/.

Summary of Change

TRADOC Pamphlet 385-1
The TRADOC Model Safety Program and Self-assessment Guide

This revision, dated – 6 January 2012

o Updates procedures and standards to be in compliance with Army Regulation 385-10.

o Updates procedures and standards to be in compliance with 29 Code of Federal Regulation 1910.

o Updates procedures and standards to be in compliance with 29 Code of Federal Regulation 1926.

Contents

Page
Chapter 1. Introduction 6
1-1. Purpose 6
1-2. References 6
1-3. Explanation of abbreviations and terms 7
Chapter 2. Safety Program Overview 7
2-1. Standard 7
2-2. Safety program success 7
Chapter 3. Safety Program Elements 8
3-1. Composite risk management (CRM) 8
3-2. Inspections, assessments, and evaluations 9
3-3. Hazard abatement 9
3-4. Accident reporting, investigation, and analysis 9
3-5. Education, training, and safety awareness 10
3-6. Branch safety/Risk Management integration 10
3-7. Additional/Collateral duty safety program 10
3-8. Safety and Occupational Health Advisory Council (SOHAC) 11
3-9. Emergency action plans 11
3-10. Initial military training (IMT) 11
3-11. Motor vehicle accident prevention 11
Chapter 4. Self-Assessment Guide 11
4-1. Implementation and use 11
4-2. Standards/documentation 12
4-3. Application 12
Appendixes
A. References 12
B. Self-Assessment Guide 20
C. Conditioning/Obstacle Course Criteria 90
D. Rappel Tower Site Inspection Criteria 134
Glossary 136

Table List
Table C-1. General administrative inspection criteria checklist 92
Table C-2. General inspection criteria checklist 92
Table C-3. IMT obstacle course administrative general inspection criteria 99
Table C-4. IMT obstacle course general inspection criteria 100
Table C-5. The tough one checklist 103
Table C-6. Inverted rope descent/the slide for life 105
Table C-7. Confidence climb checklist 108
Table C-8. Skyscraper checklist 110
Table C-9. Belly Robber checklist 112
Table C-10. The Tarzan checklist 113
Table C-11. Low belly over checklist 114
Table C-12. The dirty name checklist 115
Table C-13. The tough nut checklist 116
Table C-14. Belly crawl checklist 117

Table C-15. Inclining wall checklist 118
Table C-16. Swing, stop, and jump checklist 119
Table C-17. Six vaults checklist 120
Table C-18. Easy balancer checklist 121
Table C-19. Low wire checklist 122
Table C-20. The belly buster checklist 123
Table C-21. Hip-hip checklist 124
Table C-22. Reverse climb checklist 125
Table C-23. The weaver checklist 126
Table C-24. Balancing logs checklist 127
Table C-25. Island hoppers checklist 128
Table C-26. Fitness tower checklist 129
Table D-1. Rappel tower inspection criteria checklist 135

Figure List

Figure C-1. IMT conditioning/endurance course evaluator information checklist 91
Figure C-2. Obstacles for jumping 94
Figure C-3. Obstacles for dodging 95
Figure C-4. Obstacles for vertical climbing and surmounting 95
Figure C-5. Obstacles for horizontal traversing 95
Figure C-6. Obstacles for crawling 96
Figure C-7. Obstacle for vaulting 96
Figure C-8. Obstacle for balancing 97
Figure C-9. IMT obstacle course evaluator information 98
Figure C-10. The tough one 104
Figure C-11. Inverted rope descent/the slide for life 107
Figure C-12. Confidence climb 109
Figure C-13. Skyscraper 111
Figure C-14. Belly robber 112
Figure C-16. Low belly over 114
Figure C-17. The dirty name 115
Figure C-18. The tough nut 116
Figure C-19. Belly crawl 117
Figure C-20. Inclining wall 118
Figure C-21. Swing, stop, and jump 119
Figure C-22. Six vaults 120
Figure C-23. Easy balancer 121
Figure C-24. Low wire 122
Figure C-25. Belly buster 123
Figure C-26. Hip-hip 124
Figure C-27. Reverse climb 125
Figure C-28. The weaver 126
Figure C-29. Balancing logs 127
Figure C-30. Island hoppers 128
Figure D-1. Rappel tower site inspection information 134

This page left blank intentionally.

Chapter 1
Introduction

1-1. Purpose

a. This publication provides commanders and safety managers a model for a safety and occupational health program, defines standards, and addresses those basic safety program elements necessary for implementation of effective safety and accident prevention programs as outlined in Army Regulation (AR) 385-10 and U.S. Army Training and Doctrine Command (TRADOC) Regulation 385-2. Commanders may tailor this publication to meet their needs and local conditions to accomplish the TRADOC mission.

b. The self-assessment guide provides commanders and safety managers a standardized method to assess the scope and effectiveness of a comprehensive safety and occupational health program. The self-assessment guide consists of several checklists that provide a systematic method to assess safety program implementation. Additionally, because no checklist is all inclusive, safety professionals must utilize applicable safety laws, statutes, codes, and regulations to assist the command and leaders in implementing an effective and compliant safety program.

1-2. References

Required and related publications are listed in appendix A.

1-3. Explanation of abbreviations and terms
Abbreviations and special terms used in this pamphlet are explained in the glossary.

Chapter 2
Safety Program Overview

2-1. Standard
The TRADOC Model Safety Program is based on the legal and regulatory requirements of the Occupational Safety and Health Act of 1970, Department of Defense Instruction (DODI) 6055.1, AR 385-10, applicable laws, statues, and codes as implemented by TRADOC Regulation 385-2. Public law, executive orders, DODIs, and Army regulations direct actions to furnish employees with places and conditions of employment that are free from recognized hazards causing, or likely to cause, death or serious physical harm; and apply composite risk management (CRM) strategies to eliminate accidents, death, and occupational illnesses. Commanders at all levels should provide employees with places and conditions of employment that are free from recognized hazards likely to cause death or serious physical harm, and establish procedures to ensure employees are not subjected to restraint, interference, coercion, discrimination, or reprisal for filing a report of an unsafe or unhealthful working condition. An effective program is:

a. Comprehensive in application, built around and addresses all core functions and enduring missions of the Army and TRADOC.

b. Adequately resourced, staffed, and funded to support the Army and TRADOC mission. Ensure leaders, supervisors, managers, and individuals are empowered with the requisite training, authority, information, and resources to execute their duties safely. Focus safety on all areas of risk by employing sound CRM practices.

c. Universal in scope, providing effective support to current operations, yet remaining sufficiently flexible to support future operations. Not a static program, the safety program is tailored to the existing operational environment and updated as required by accident experience and lessons learned.

2-2. Safety program success
The ability to implement, manage, and measure an effective safety program, and the ultimate success of the model program depend on three enduring threads of continuity:

a. Ownership. Personal involvement of commanders, leaders, and supervisors at each level of command/organization sets the focus and direction of safety program and accident prevention efforts. It empowers Soldiers and workers with the authority to implement the safety mission.

b. Oversight. A qualified safety manager (as defined in AR 385-10 and the Office of Personnel Management standards), with direct and unimpeded access to the commander, is essential. This ensures commanders maintain a situational awareness of the effectiveness of CRM implementation and safety program effectiveness, and reinforces the credibility of the safety manager in dealing with other staff elements.

c. Standards. The safety program document sets the standard for each individual safety program and sub-elements of that program. A written safety program document clearly defines the commander's intent, fixes responsibility and accountability, and formally defines requirements for acceptable performance.

Chapter 3
Safety Program Elements

3-1. Composite risk management (CRM)

a. CRM is the Army's primary decisionmaking process for identifying hazards and controlling risks across the full spectrum of Army missions, functions, operations, and activities. A CRM based safety program puts into place a systematic, disciplined, management process that focuses on priorities so that the mission is accomplished without unnecessary risk. CRM:

(1) Fosters initiative and further freedom of action by defining risk parameters within which an operation must remain, rather than imposing unnecessary restrictions or limitations on leaders.

(2) Creates an operational climate that promotes mission accomplishment with minimal risk.

(3) Is dependent upon two critical elements for effectiveness:

(a) First, leaders must understand the decisionmaking process of CRM.

(b) Second, there must be a system in place to effectively deal with changes in mission or activity risk levels due to changes in circumstances or conditions.

b. Commanders/commandants must ensure CRM is institutionalized in all school products, training courses, and combat training center programs. Service school graduates must be trained and proficient in assessing and managing risk in both training and operational environments. A CRM structure and control system must also be in place to ensure on the ground leadership presence at the appropriate level for all high and moderate risk training. Leaders must also clearly define risk decision authority to include the role/responsibility in the approval process for executing high and moderate risk training, ensure the conduct of initial and periodic on the ground review or "lane proofing" of all recurring training activities, provide clear guidance on where risk decision authority lies, and where possible, get risk decisions ahead of time where risk is known and understood. Risk decision authority must be clearly understood and enacted. The primary tenets of effective CRM are that commanders accept no risk unless the potential benefit outweighs the potential loss and that risk decisions are made at the appropriate level. Appropriate risk decision authority (residual risk) in accordance with TRADOC Regulation 385-2 follows:

(1) Extremely high risk: Senior commander of general officer grade.

(2) High risk: Colonel or equivalent grade, as designated by the senior commander.

(3) Moderate risk: Lieutenant colonel or equivalent grade, and command sergeants major serving as noncommissioned officer (NCO) academy or command sergeants major academy commandants, as designated by the senior commander.

(4) Low risk: As designated by the senior commander.

c. Commanders should establish and publish a CRM standard that incorporates this guidance and designates risk decision authority consistent with TRADOC criteria. Risk decisions are based on the residual risk of an activity, after application of appropriate control measures. They are briefed one level up the chain of command from the decisionmaker.

3-2. Inspections, assessments, and evaluations

Safety assessments and evaluations are important tools in effectively identifying hazards and controlling risk and provide a safe and healthful workplace. Safety assessments may be the result of an unusual occurrence or an out of the ordinary planned activity. In all cases, inspections, assessments, and evaluations are oriented toward the identification of hazards or measuring the effectiveness of accident prevention efforts, not the effectiveness of the command or leadership. An aggressive safety and occupational health inspection program ensures that all workplaces are inspected on an annual basis. See paragraph 4-1b for implementation and use of inspections.

3-3. Hazard abatement

Law and regulation direct that hazards be eliminated on a worst first basis. To ensure that the worst hazards are corrected first, coordinate the listing of all safety and occupational related hazards with the Garrison Safety Office for integration into a single garrison hazards abatement log maintained by the garrison safety manager. Hazards may be identified by a variety of means, such as inspections, accidents, routine maintenance and repair operation, or requests (work orders/job orders, customer reports, etc.) for repair or replacement of material or facilities. To ensure all hazards are correctly assessed and included in the garrison hazard abatement log, ensure the garrison safety manager reviews and validates all work orders, job orders, or requisitions that have a safety or occupational health connection. Once a violation or hazard is identified, the safety manager or a qualified safety professional must ensure it is risk assessed in terms of hazards severity and accident probability. This assessment is expressed in terms of a risk assessment code (RAC) which identifies the relative seriousness of the hazard. Prepare a garrison abatement plan for each RAC 1 or 2 hazard when the correction exceeds 30 days.

3-4. Accident reporting, investigation, and analysis

Accident investigations and careful analysis of accident information provides the safety manager with the means to identify potential sources of future accidents and to develop and implement countermeasures. Ensure the command accident prevention program also supports the Garrison Civilian Personnel Office's effort to reduce injuries and occupational illnesses. In addition to the accident reports Department of the Army (DA) Pam 385-40 requires near-miss information is important in identifying hazards before they can result in serious damage or injury. Trained additional duty safety officers (ADSO) or collateral duty safety officers (CDSOs), and first-line

supervisors are the best sources for this information. Other important sources of accident information are military police blotter reports, hospital admission and discharge sheets, sick call slips, and estimated cost of damage reports from the General Services Administration and unit motor pools. When collected, organized, and analyzed, this information may yield valuable data on potential problems or hazards, education/training shortfalls, motivation or leadership issues, procedural or standard inadequacies, or other potential problem areas. These potential problems, hazards, or shortfalls may often go unnoticed or undetected, because individual units and organizations view them as isolated instances. A successful accident prevention program will be one in which accident data and statistics are used strictly for accident prevention purposes, not to attempt to document command or leadership effectiveness.

3-5. Education, training, and safety awareness

The prevention of accidents and the associated mission impact and loss of resources is the responsibility of every member of the Army team. Law and regulation require training for all Army personnel, Soldiers and civilians, commensurate with their duties and responsibilities. The most effective accident prevention program recognizes this and sustains an extensive, ongoing program of safety training to educate, motivate, and raise safety awareness. Commanders, leaders, and supervisors at all levels, as well as individual Soldiers and civilian employees, are important in the accident prevention process. The effectiveness of their contributions, however, depends on their knowledge and understanding of safety and CRM and their responsibility in the Army Safety Program.

3-6. Branch safety/CRM integration

Integration of safety and CRM into Army doctrine, organizations, training, materiel, leadership and education, personnel, and facilities is inherent in the worldwide branch safety mission. Unlike safety managers within other Army commands, TRADOC safety managers have worldwide branch safety mission responsibility. In addition to the safety and CRM integration mission, branch safety managers monitor the operations, training, equipment, and tactics, techniques, and procedures within their specific branch. For this reason, TRADOC standards dictate that the qualified command safety and occupational health manager is rated by, and reports directly to the senior commander, school commandant, or respective chief of staff.

3-7. Additional/Collateral duty safety program

The trained ADSO/CDSO is essential to the safety manager's ability to reach all levels of command, gather accident prevention information, identify hazards, and meet legal and regulatory requirements. Additional/collateral duty safety personnel may conduct inspections of low risk workplaces, but only when they are trained to identify hazards and recommend appropriate abatement action. A good safety program provides training in addition to the online ADSO/CDSO course, so that trained safety professionals are free to devote their time and energy to dealing with the more serious safety issues that require extensive technical expertise. ADSO/CDSOs collect accident reports for their activities or units. They are the local commander's safety representative and an important source of information at the grass root level in gauging the effectiveness of the commander's safety program.

3-8. Safety and Occupational Health Advisory Council (SOHAC)
An active SOHAC, chaired by the commander/commandant/chief of staff, meeting regularly, and composed of military and civilian management and operating personnel membership, is necessary for the effective interchange of safety and occupational health information. Participation of the commander/commandant/chief of staff demonstrates command support and sets the tone for the safety/accident prevention program. Command visibility and active participation in the safety council sends a powerful message to subordinate commanders and staff on the importance of safety.

3-9. Emergency action plans
Preplanned, coordinated, and regularly tested emergency action, disaster preparedness, and pre-accident plans are proven methods to minimize loss of life and property damage due to natural or man-made disasters. Commanders/commandants should coordinate and integrate their needs into garrison emergency action, disaster preparedness, and pre-accident plans as appropriate to their mission. Safety managers should develop, coordinate, publish, and test pre-accident plans for both ground and aviation accidents and assist the garrison in development, coordination, and maintenance of emergency action and disaster preparedness plans.

3-10. Initial military training (IMT)
The safety and well-being of Soldiers during their IMT is critical to the success of the TRADOC training mission. Soldiers arriving at Army reception battalions come from many differing backgrounds and in differing levels of physical condition. Similarly, cadets and newly-appointed officers also exhibit some of that diversity. Consequently, some may be at a greater risk of injury/illness. Safety directors with an IMT mission should develop and implement an aggressive accident prevention strategy to provide these Soldiers a training environment that facilitates their transition from civilian to military life.

3-11. Motor vehicle accident prevention
An enduring threat and a serious problem to TRADOC and the Army is the tragic loss of Soldiers and civilian workers in vehicle accidents. Privately owned vehicle (POV) accidents continue as the single leading cause of accidental death for our Soldiers, civilians, and their Family members. This needless loss of life demands actions. Commands with aggressive motor vehicle accident prevention strategies and programs enjoy greater success at reducing the incidence of motor vehicles and POV accidents than those commands that do not. All successful motor vehicle and POV accident prevention programs start with active command involvement. Other program elements common to an effective POV prevention programs include driver/rider training initiatives, a functioning POV task force, motorcycle mentorship, and the involvement of the first-line leaders. Leaders must make every effort to use other available tools to combat the rising incidence of vehicular accidents.

Chapter 4
Self-Assessment Guide

4-1. Implementation and use

a. Safety assessments and evaluations are important tools to effectively identify hazards and control risk. Orient inspections, assessments, and evaluations on identification of hazards or assessment of the effectiveness of accident prevention efforts, not the effectiveness of the command or leadership.

b. An aggressive safety and occupational health inspection program ensures that all workplaces are inspected on an annual basis. Facilities or operations involving special hazards may be inspected more frequently. Qualified safety and occupational health professionals should conduct inspections and provide written reports of violations to the head of the activity or the commander of the unit/organization inspected. The self-assessment guide and associated checklists in appendix B provide commanders and safety managers an effective tool to document the scope and effectiveness of their safety and accident prevention efforts.

4-2. Standards/documentation

Documentation of program elements serves as an indication of program effectiveness. Documentation such as local policies, regulations, or standing operating procedures (SOPs); however, do not in themselves ensure program implementation. Ensure documentation is relevant, current, and in accordance with the appropriate standards. Make sure users are familiar with their existence and content; and the standards are applied to the relevant events or operations.

4-3. Application

The self-assessment guide (see appendix B) and conditioning/obstacle course criteria (see appendix C) consist of a series of checklists that provide a systematic, standardized means to evaluate/assess the compliance of program elements with directives, legal standards, and regulations. Each provides the user the appropriate reference for the requirement, as well as a recommended documentation to assess implementation. The self-assessment guide is not all inclusive of every safety requirement required by public law, statute, and regulation. Therefore, research applicable public law, statute, and regulation that pertain to your command and situation.

Appendix A
References

Section I
Required Publications

AR 25-400-2
The Army Records Information Management System (ARIMS)

AR 40-5
Preventive Medicine

AR 95-1
Flight Regulations

AR 350-1
Army Training and Leader Development

AR 385-10
The Army Safety Program

AR 385-63
Range Safety

AR 420-1
Army Facilities Management

AR 500-3
U.S. Army Continuity of Operations Program Policy and Planning

AR 600-55
The Army Driver and Operator Standardization Program (Selection, Training, Testing, and Licensing)

DA Pam 385-10
Army Safety Program

DA Pam 385-16
System Safety Management Guide
DA Pam 385-24
The Army Radiation Safety Program

DA Pam 385-30
Mishap Risk Management

DA Pam 385-40
Army Accident Investigation and Reporting

DA Pam 385-61
Toxic Chemical Agent Safety Standards

DA Pam 385-63
Range Safety

DA Pam 385-64
Ammunition and Explosives Safety Standards

DA Pam 385-65
Explosive and Chemical Site Plan Development and Submission

DA Pam 385-90

Army Aviation Accident Prevention

DA Pam 420-10
Space Management Guide

Department of Defense Directive 5000.1
The Defense Acquisition Team

Department of Defense Directive 6055.9E
Department of Defense (DOD) Explosives Safety Management and DOD Explosives Safety Board

DODI 6055.1
DOD Safety and Occupational Health (SOH) Program

DODI 6055.04
DOD Traffic Safety Program

FM 3-25.150
Combatives

FM 5-19
Composite Risk Management

FM 6-0
Mission Command: Command and Control of Army Forces

FM 21-10
Field Hygiene and Sanitation

TB MED 530
Food Service Sanitation

Title 29 Code of Federal Regulations (CFR) 1200

Title 23 CFR 1230
Uniform Procedures for State Highway Safety Programs

Title 29 CFR 1910
Occupational Safety and Health Standards

Title 29 CFR 1926
Construction Standards

Title 29 CFR 1960
Basic Program Elements for Federal Employees Occupational Safety and Health Administration

TRADOC Regulation 350-6
Enlisted Initial Entry Training Policies and Administration

TRADOC Regulation 350-16
Drill Sergeant Program

TRADOC Regulation 350-29
Prevention of Heat and Cold Casualties

TRADOC Regulation 350-70
Systems Approach to Training Management, Process, and Procedures

TRADOC Regulation 385-2
U.S. Army Training and Doctrine Command Safety Program

TC 3-22.20
Army Physical Readiness Training

TC 21-24
Rappelling

"Operational and Training Facilities" Corps of Engineers Drawing Number DEF 028-13-95

National Fire Protection Association 72

Section II
Related Publications

AR 15-6
Procedures for Investigating Officers and Boards of Officers

AR 50-6
Chemical Surety

AR 70-1
Army Acquisition Policy

AR 75-1
Malfunctions Involving Ammunition and Explosives

AR 200-1
Environmental Protection and Enhancement

AR 215-1
Military Morale, Welfare, and Recreation Programs and Nonappropriated Fund Instrumentalities

AR 335-15
Management Information Control System

AR 350-90
The Army Sustainable Range Program

AR 600-8-22
Military Awards

AR 672-20
Incentive Awards

AR 690-950
Career Management

AR 700-141
Hazardous Materials Information Resource System

AR 870-20
Army Museums, Historical Artifacts, and Art

DA Pam 385-40
Army Accident Investigation and Reporting

DODI 4500.9-R, part II
Defense Transportation Regulation (Cargo Movement)

DODI 6050.05
DOD Hazard Communication Program

DODI 6055.06
DOD Fire and Emergency Services Program

DODI 6055.07
Accident Investigation, Reporting and Recordkeeping

DODI 6055.08
Occupational Ionizing Radiation Protection Program

DODI 6055.09-M
DOD Ammunition and Explosives Safety Manual

DODI 6055.11
Protecting Personnel from Electromagnetic Fields

DODI 6055.12
Hearing Conservation Program

DODI 6055.15
DOD Laser Protection Program

FM 3-0
Operations

FM 10-67-1
Concepts and Equipment of Petroleum Operations

TB MED 575
Swimming Pools and Bathing Facilities

TC 5-210
Military Float Bridging Equipment

TC 3-22.20
Army Physical Readiness Training

TC 21-21
Water Survival Training

TC 21-305
Training Program for Wheeled Vehicle Accident Avoidance

Title 10 CFR 19
Notices, Instructions, and Reports to Workers: Inspection and Investigations

Title 10 CFR 20
Standards for Protection Against Radiation

Title 29 CFR 1926.59
Hazard Communication

Title 33 CFR 183
Boats and Associated Equipment

Section III
Prescribed Form

This section contains no entries.

Section IV
Referenced Forms

DA Form 1045
Army Ideas for Excellence Program (AIEP) Proposal

DA Form 2028
Recommended Changes to Publication and Blank Forms

DA Form 2609
Historical Property Catalog

DA Form 2696
Operational Hazard Reports

DA Form 4754
Violation Inventory Log

DA Form 4755
Report of Alleged Unsafe or Unhealthful Working Conditions

DA Form 5752-R
Rope Log (Usage and History)

DA Form 7306
Worksheet for Telephonic Notification of Ground Accident

Occupational Safety and Health Administration Form 300
Work-Related Injuries and Illnesses

Standard Form 91
Motor Vehicle Accident Report

Appendix B
Self-Assessment Guide

B-1. Program management
Program management is a core element of the TRADOC safety program. Program management requirements apply to all TRADOC operations and activities in accordance with AR 385-10, and applicable laws, statutes, codes, and regulations. The self-assessment checklist for program management appears in table B-1.

Table B-1 Program management

	Program Management	YES	NO	Remarks
1	Has commander/commandant established a SOH to protect personnel, equipment, and facilities that is emphasized, resourced, and ensures a vital organization-wide safety program that includes:			
	(1) General safety requirements (Required)			
	(2) Strategic Planning, Army Safety Program Structure, Safety Program Evaluation, Councils, and Committees (Required)			
	(3) Accident investigation and reporting (Required)			
	(4) Contracting safety (Required)			
	(5) Explosives/Range safety management (Mission dictated)			
	(6) Public, family, off-duty recreation and seasonal safety (Required)			
	(7) Radiation safety management (Mission dictated)			
	(8) Safety awards program (Required)			
	(9) System safety management (Mission dictated)			
	(10) Training requirements (Required)			
	(11) Motor vehicle accident prevention (Required)			
	(12) Force Mobilization (Mission dictated)			
	(13) Tactical safety (Mission dictated)			
	(14) Safe cargo operations (Required)			
	(15) Aviation safety management (Mission dictated)			
	(16) Occupational safety and health program (Required)			
	(17) Workplace inspections (Required)			
	(18) Industrial Operational Safety (Required)			

	Program Management continued	**YES**	**NO**	**Remarks**
	(19) Emergency Planning and Response (Required)			
	(20) Biological Defense Safety (Mission dictated)			
	(21) Chemical Agent Safety Management (Mission dictated)			
	(22) Marine activities (Required)			
	(23) Medical Safety (Mission dictated)			
	(24) Facility Reuse and Closure (Required)			
	Standard: AR 385-10, paragraph 1-4m(9), Table 1-1			
	Documentation: Safety regulation, SOPs, memorandums, and training records.			
2	Does the commander/commandant have a single source safety and occupational health regulation/program document that prescribes policy, responsibilities, and key safety and occupational health principles?			
	Standard: AR 385-10, paragraph 1-1, 1-5a-d, 1-6, 1-9.			
	Documentation: Command safety regulation, SOP, memorandums, and training records.			
3	Has the commander/commandant established strategic goals, metrics and plans required to achieve those goals that are addressed as a section in the Safety and Occupational Health (SOH) regulation/program document, with annual organizational accident prevention goals and objectives that incorporates TRADOC's annual goals and objectives?			
	Standard: AR 385-10, paragraph 2-1; DA Pam 385-10, paragraph 2-1.			
	Documentation: Goals and strategic plan on hand and implemented.			

	Program management continued	**YES**	**NO**	**Remarks**
4	Is the command safety office/organization funded and fully resourced to execute all responsibilities and functions designated in respective safety regulation to assure safety program effectiveness?			
	Standard: AR 385-10, paragraph 2-6c.			
	Documentation: Budget/Table of distribution & allowances (TDA)			
5	Is the command structured and staffed to administer a safety and occupational health program through the chain of command that is based upon the organization's mission, goals, and objectives as well as statutory requirements?			
	Standard: AR 385-10, paragraphs 2-5a and 2-6a, 2-6b and DA Pam 385-10, paragraph 3-3.			
	Documentation: (TDA)			
6	Does the safety manager develop policy and procedures for the integration of safety and occupational health, CRM, and accident prevention activities of the command?			
	Standard: DA Pam 385-10, paragraph 3-2c(4).			
	Documentation: Policies, SOP, and regulation.			
7	Has commander/commandant co-located mission and garrison safety resources into a single safety organization reporting to the senior commander?			
	Standard: TRADOC Regulation 385-2, paragraph 1-4e(3).			
	Documentation: Regulation, SOP, policy, organizational diagram, and TDA.			

	Program management continued	YES	NO	Remarks
8	Is the safety manager a member of the commander's/ commandant's special staff reporting directly to the commander or the chief of staff?			
	Standard: AR 385-10, paragraph 2-7e.			
	Documentation: Organizational chart/rating chart.			
9	Does the safety director/manager meet the U.S. Office of Personnel Management (OPM) standards for the positions of Occupational Safety and Health, GS 0018/0803?			
	Standard: AR 385-10, paragraph 2-7e.			
	Documentation: Review safety manager/director's job description.			
10	Is the safety and occupational health office staffed with professional safety personnel meeting the requirements for these positions established by OPM?			
	Standard: AR 385-10, paragraph 2-7f, TRADOC Regulation 385-2, paragraph 1-4f(4).			
	Documentation: Review position descriptions.			
11	Are safety professionals receiving adequate training to perform their duties in accordance with 29 CFR 1960?			
	Standard: AR 385-10, paragraph 10-4, 29 CFR 1960.			
	Documentation: Individual development plans and training records.			
12	Does the safety manager assist all elements of the command in the implementation of the strategic safety plan?			
	Standard: DA Pam 385-10, paragraph 3-2c(2).			
	Documentation: Published strategic safety plan.			

	Program management continued	**YES**	**NO**	**Remarks**
13	Are command procedures published to implement effective public, family, sports, and off-duty recreation safety programs; identify responsibilities for all subordinate organizations and installations?			
	Standard: AR 385-10, chapter 6; DA Pam 385-10, chapter 5.			
	Documentation: Safety documentation (i.e., regulation, standard memorandum, etc.)			
14	Has the commander/commandant established, resourced, and implemented a safety program for water recreational activities to include boating (lifeguards present)?			
	Standard: AR 385-10, paragraphs 6-6 and 6-7; TRADOC Regulation 385-2, paragraph 9-2a(4).			
	Documentation: Regulation, SOPs, lesson plans, and attendance records.			
15	Does the commander/commandant develop and implement procedures to ensure Soldiers have applied CRM to their leave, pass, temporary duty, or permanent change of station travel plans, which involve driving out of the local area, as determined by the commander.			
	Standard: AR 385-10, paragraphs 6-3a; 6-3a(1).			
	Documentation: Copy of Travel Risk Planning System (TRiPS), risk assessments, counseling or regulation, policy memorandums, and SOP.			

	Program management continued	**YES**	**NO**	**Remarks**
16	Does the commander/commandant develop and administer promotional programs and procedures to increase awareness of the specific hazards associated with the change of seasons and celebration of holidays?			
	Standard: AR 385-10, paragraph 6-4.			
	Documentation: Promotional items on hand, safety memorandums, advertisements; i.e., safety shows, training documentation.			
17	Does the safety office review command sponsored safety requirements for sporting events?			
	Standard: AR 385-10, paragraph 6-11.			
	Documentation: Sporting safety information documents. Submission of safety requirements to installation safety.			
18	Has a SOHAC or Soldier and Army Civilian Employee Safety Committee been established that meets at least semiannually?			
	Standard: AR 385-10, paragraph 2-24, TRADOC Regulation 385-2, paragraph 1-8.			
	Documentation: Signed minutes and attendance roster from council.			

	Program management (continued)	**YES**	**NO**	**Remarks**
19	Do subordinate units not staffed with safety professionals appoint additional/collateral duty safety personnel by written orders?			
	Standard: AR 385-10, paragraph 2-7g.			
	Documentation: Audit, inspections, evaluation reports, or copies of current additional duty orders.			
20	Does safety office provide additional training to additional duty safety officers ADSOs and CDSOs?			
	Standard: AR 385-10, paragraph 10-8(b).			
	Documentation: Lessons plans, attendance rosters, certificate of completion of training.			
21	Does the command ensure that ADSOs/CDSOs are: Appointed by commander on written orders. Are commissioned officers at battalion and higher unit levels in the rank of staff sergeant or higher at the company level with 1 year or more retainability in the unit at appointed? Report directly to commander safety related matters. Coordinate activities with safety office.			
	Standard: AR 385-10, paragraph 2-7g.			
	Documentation: Review ADSO/CDSO roster and orders.			
22	Has the commander/commandant established accountability for safety and occupational health through the performance evaluation system and performance counseling sessions?			
	Standard: AR 385-10, paragraph 1-5c(5).			
	Documentation: Policy, memorandums, regulation, SOPs.			

	Program management (continued)	**YES**	**NO**	**Remarks**
23	Is the safety office represented on the Emergency Planning Team/Crisis Action Team/Continuity of Operations Program?			
	Standard: DA Pam 385-10, paragraph 10-4a; AR 500-3.			
	Documentation: Attendance roster and minutes from Emergency Planning Team meetings.			
24	Have formal agreements been developed with tenant or other organizations as necessary?			
	Standard: AR 385-10, paragraph 2-5a(3); TRADOC Regulation 385-2, paragraph 1-6a.			
	Documentation: Memorandum of agreement.			
25	Have battalion commanders registered in the web-based Army Readiness Assessment Program within 90 days of assuming command?			
	Standard: TRADOC Regulation 385-2, paragraph 1-4(f)(15).			
	Documentation: TRADOC Army Readiness Assessment Program Report, tracking database, documentation of completion.			
26	Have battalion commanders conducted a follow-up Army Readiness Assessment Program assessment at mid-tour or 12 months in command, to evaluate unit progress against initial results?			
	Standard: TRADOC Regulation 385-2, paragraph 1-4(f)(15).			
	Documentation: TRADOC Army Readiness Assessment Program Report, tracking database, documentation of completion.			

	Program management (continued)	**YES**	**NO**	**Remarks**
27	Is safety integrated into the contracting process? Are contracts in accordance with the requirements and reviewed by safety office?			
	Standard: AR 385-10, chapter 4.			
	Documentation: Copies of contracts.			
28	Does contracting officer representative monitor contractor(s) safety and training program?			
	Standard: AR 385-10, paragraph 4-4			
	Documentation: Written record of meetings with contracting officer representative and contractors.			
29	Mobilization (as required) have leaders at all levels established a command climate that promotes safety and health during pre and post mobilization/integration?			
	Standard: AR 385-10, chapter 12.			
	Documentation: Command policy.			
30	Are cargo operations conducted safely IAW public law, statutes, and regulation?			
	Reference: AR 385-10, chapter 14.			
	Documentation: SOP, risk assessments on hand.			

	Program Management (continued)	**YES**	**NO**	**Remarks**
31	Does safety director ensure the implementation of industrial safety requirements?			
	Reference: AR 385-10, DA Pam 385-10, TRADOC Regulation 385-2, paragraph 13-3.			
	Documentation: Safety inspection of operation on file.			
32	Installation safety director ensures public, family, off-duty recreation, and seasonal safety programs are implemented.			
	Reference: AR 385-10, TRADOC Regulation 385-2, paragraph 13-5.			
	Documentation: Written public, family, off-duty, recreational, and seasonal safety policy, SOP, regulation on hand.			
33	Does safety director with an individual mobilization mission oversee and monitor mobilization safety program IAW applicable regulations?			
	Reference: TRADOC Regulation 385-2, paragraph 13-6.			
	Documentation: Individual mobilization training support package (TSP), SOP, regulation, or policy on hand.			

B-2. Education and training

Commanders and/or supervisors shall ensure that required safety education and training is scheduled, conducted, and documented that includes but not limited to: personal protective equipment; general safety requirements particular to the operation; CRM mitigation techniques and controls; special safety requirements; lessons learned from previous operations; procedures for reporting and responding to accidents; identification of all known and perceived accidents. See table B-2 for the self-assessment checklist for education and training.

Table B-2 Education and training

		YES	NO	Remarks
1	Are leaders provided specialized training to enable them to execute their safety and occupational health and CRM leadership responsibilities properly?			
	Standard: AR 385-10, paragraph 10-5.			
	Documentation: Training requirements, lesson plans, and attendance rosters.			
2	Have leaders and managers integrated CRM into all Army processes and operations?			
	Standard: AR 385-10, paragraph 10-3(a) TRADOC Composite Risk Management Integration Plan.			
	Documentation: Review SOPs, policies, regulation, lesson plans, and operation orders.			
3	Does the safety office monitor the command to ensure all Army personnel are provided CRM training in areas needed for a safe and efficient execution of their tasks?			
	Standard: AR 385-10, paragraph 10-2.			
	Documentation: Inspection reports that document CRM training for instructors, cadre, training developers, combat developers, and drill sergeants, etc.			

	Education and training (continued)	**YES**	**NO**	**Remarks**
4	Does safety office conduct evaluations to ensure that personnel receive adequate training to perform their duties in accordance with 29 CFR 1960?			
	Standard: 29 CFR 1960; AR 385-10, paragraph 10-4.			
	Documentation: Inspections and reports.			
5	Have commanders and other personnel required to complete the online Commander's Safety Course have documentation on hand?			
	Standard: AR 385-10, paragraph 10-6.			
	Documentation: Training records.			
6	Does command have a written Hazard Communication Program that is implemented and maintained at each level of activity and are workers receiving hazard communication training?			
	Standard: AR 385-10, paragraph 16-2d(2); DA Pam 385-10, paragraph 14-2.			
	Documentation: Written program, training records, lesson plans, and attendance rosters.			
7	Does commander/commandant representative evaluate subordinate commands to ensure safety policies and procedures are established to ensure employees are provided appropriate job training?			
	Standard: 29 CFR 1960; AR 385-10, paragraph 10-4.			
	Documentation: Lesson plans, attendance roster, and certificates of completion.			

	Education and training (continued)	**YES**	**NO**	**Remarks**
8	Does the command require supervisors to ensure employees have sufficient training, licensure, qualification, and experience prior to assignment to a particular job or activity?			
	Standard: AR 385-10, paragraph 18-7.			
	Documentation: Policy, SOP, and Organization Inspection Program checklist.			

B-3. Safety awards and promotion

Safety awards and promotion are an effective part of a safety program that enhance Army operations and improve safety and CRM awareness through recognition and promotion of individual and organizational accident prevention methods and successes. See table B-3 for the self-assessment checklist for promotion and awards.

Table B-3 Safety awards and promotions

		YES	NO	Remarks
1	Does the command publish holiday, seasonal, and special hazard safety alerts, messages, and bulletins to raise safety awareness during periods of increased risk, or alert the commander of special seasonal hazards?			
	Standard: AR 385-10, paragraph 6-4.			
	Documentation: Copy of safety messages, safety alerts, etc.			
2	Does the safety office budget, procure and issue promotional items?			
	Standard: AR 385-10 paragraph 10-9; TRADOC Regulation 385-2, paragraph 5-7.			
	Documentation: SOP, policy letters, and inventory of items on hand.			
3	Does commander have an active safety awards program?			
	Standard: AR 385-10, chapter 8; TRADOC Regulation 385-2, paragraph 5-2b(1).			
	Documentation: Program documentation, copies of awards.			
4	Do commanders at all levels promote and implement the Safety Awards Program?			
	Standard: AR 385-10, chapter 8; TRADOC Regulation 385-2, paragraph 5-3.			

	Documentation: Safety and occupational health council, staff meetings, e-mail, local papers, flyers, posters, etc.			

	Safety awards and promotions (continued)	**YES**	**NO**	**Remarks**
5	Does the safety office distribute educational and marketing information on the Army's Safety Awards Program?			
	Standard: AR 385-10, paragraph 8-7; TRADOC Regulation 385-2, paragraph 5-7.			
	Documentation: Promotion and educational material.			
6	Does the safety office have an active unit safety certification program?			
	Standard: AR 385-10, paragraph 8-6.			
	Documentation: Unit safety certificates.			

B-4. Workplace safety, inspections, hazard analysis, and countermeasures development
Inspections measure adequacy and/or determine effectiveness of controls in achieving workplace safety. In TRADOC training areas, classrooms, and ranges may be the place of work. Safety managers collect, review, and analyze data from various sources to identify trends, systemic deficiencies, or profiles for use in establishing program initiatives and priorities. Safety managers develop countermeasures to correct deficiencies and/or eliminate or reduce hazards. The self-assessment checklist for workplace safety, inspections, hazard analysis, and countermeasures development is found at table B-4.

Table B-4 Workplace safety, inspections, hazards analysis, and countermeasures development

		YES	NO	Remarks
1	Has the safety director ensured that job hazard analysis has been conducted and level of risk identified for all workplaces that include industrial operations, safe cargo operations, training areas, and other applicable operations?			
	Standard: AR 385-10; chapters 1, 3-5, 7, 10, 13-18, 21, 22; DA Pam 385-10, paragraphs 8-2, 8-3, 8-5; DA Pam 385-30, paragraph 2-12.			
	Documentation: Written or electronic list indicating buildings, facilities, and operations with level of risks assigned.			
2	Are civilian and military operations conducted in accordance with requirements such as safe cargo, marine activities, radiation, and industrial operations, etc in order to provide a safe and healthful workplace?			
	Standard: AR 385-10, chapters 1, 3-5, 7, 10, 13-18, 21, and 22; DA Pam 385-10.			
	Documentation: Regulation, SOPs, TSPs, memorandum.			
3	Has commander/commandant developed and implemented a safety and occupational health inspection program audit that ensures each subordinate organization is evaluated at least every 12 to 18 months?			
	Standard: AR 385-10, paragraph 2-11.			

	Documentation: Inspection schedules and reports.			
	Workplace safety, inspections, hazards analysis, and countermeasures development (continued)	**YES**	**NO**	**Remarks**
4	Are barracks inspected at least annually by a qualified safety and health professional or competent specially trained personnel? Are dining facilities inspected at least semiannually by safety, fire department, and preventive medicine?			
	Standard: AR 385-10, paragraph 17-6a, g; AR 40-5, paragraph 1-7d(2); DA Pam 40-11, 5-20; TRADOC Regulation 350-6 L-2 a and b.			
	Documentation: Copies of inspection reports.			
5	Are qualified safety and occupational health professionals or specially trained competent personnel conducting the inspections?			
	Standard: AR 385-10, paragraph 17-6a.			
	Documentation: Training records.			
6	Is the safety office using performance indicators and matrices in executing their inspection program?			
	Standard: AR 385-10, paragraph 2-11c.			
	Documentation: Inspection reports and performance indicators.			
7	Does the safety office validate all RAC 1 or RAC 2 work orders/projects?			
	Standard: DA Pam 385-10, paragraph 8-5.			
	Documentation: Review hazard abatement plan and safety inspection reports.			

	Workplace safety, inspections, hazards analysis, and countermeasures development (continued)	**YES**	**NO**	**Remarks**
8	Does the safety office have a system established and implemented to ensure corrective action is completed in a timely manner?			
	Standard: DA Pam 385-10, chapter 8.			
	Documentation: Copies of response indicating corrective action and verification.			
9	Is there a program or policy for reporting unsafe or unhealthful conditions?			
	Standard: AR 385-10, paragraph 17-9.			
	Documentation: Copies of DA Form 4755 (Report of Alleged Unsafe or Unhealthful Working Conditions).			
10	Does the commander/commandant have a policy in place requiring supervisors to develop an accident prevention and response plan for each activity under their direct control and administration?			
	Standard: AR 385-10, paragraph 18-6.			
	Documentation: SOP, policy, and regulations.			
11	Are facility fire alarms and smoke detectors installed, serviceable, and tested periodically?			
	Standard: National Fire Protection Association 72 – National Fire Alarm Code, and 29 CFR 1910.164 (b)(2), (c)(2).			
	Documentation: Inspect and test equipment.			

	Workplace safety, inspections, hazards analysis, and countermeasures development (continued)	**YES**	**NO**	**Remarks**
12	Are identified (safety or health-related) deficiencies corrected in a timely manner?			
	Standard: DA Pam 385-10, paragraphs 8-2, 8-5.			
	Documentation: Date of identification versus date of correction.			
13	Is personal protective equipment provided, used, and maintained in a sanitary and reliable condition?			
	Standard: DA Pam 385-10, paragraph 8-2, table C-3; 29 CFR 1910.132-138; 1910.147.			
	Documentation: Maintenance documentation available on personal protective equipment.			

B-5. Accident investigation, reporting, and analysis

Collection and analysis of accident/incident information is critical to the accident prevention process and takes place at several levels of command. The safety office is the command/activity focal point for review of accident investigations, collection and analysis of accident/incident information, and the development of timely and effective countermeasures. The self-assessment checklist at table B-5 is provided to assist in this effort.

Table B-5 Accident investigation, reporting, and analysis

		YES	NO	Remarks
1	Has the commander/commandant developed and established standards and procedures to implement the accident investigation program within their command?			
	Standard: AR 385-10, paragraph 1-4m(14).			
	Documentation: Command safety documentation (i.e., regulation, standard memorandum, etc.)			
2	Does commander/commandant develop metrics for rate of accident occurrence, severity and cost for recording and review with the commander as part of the commander's regular oversight process?			
	Standard: AR 385-10, paragraph 2-10.			
	Documentation: Accident trends and analysis.			
3	Does the commander/commandant review accident trends and analysis with subordinate commanders, directors, and managers and discuss resolutions to causation factors?			
	Standard: AR 385-10, paragraph 2-24.			
	Documentation: Copy of trends and analysis and minutes to command safety council.			

	Accident investigation, reporting, and analysis (continued)	**YES**	**NO**	**Remarks**
4	Has commander/commandant developed local training for accident reporting, investigation requirements, and analysis?			
	Standard: 29 CFR 1960; AR 385-10, paragraph 1-4m(6), 10-4.			
	Documentation: Training programs.			
5	Are all accidents reported, investigated, and analyzed?			
	Standard: AR 385-10, paragraph 3-2; TRADOC Regulation 385-2, 2-1(a).			
	Documentation: Check accident feeder reports against files.			
6	Is the safety office a member of the Federal Employees' Compensation Act working group?			
	Standard: TRADOC Regulation 385-2, paragraph 2-1b.			
	Documentation: Check meeting roster.			
7	Are fatality review boards and fatality after accident reviews completed?			
	Standard: TRADOC Regulation 385-2, paragraph 2-6b.			
	Documentation: Check submission dates of fatality after accident reviews.			

	Accident investigation, reporting, and analysis (continued)	**YES**	**NO**	**Remarks**
8	Does the safety office have a system for receiving feeder reports?			
	Standard: TRADOC Regulation 385-2, paragraph 2-7(a).			
	Documentation: Copy of feeder reports from military police blotters, traffic accident reports, serious incident reports, estimated cost of damage reports, admission and disposition sheets, Standard Form 91(s) Motor Vehicle Accident Report), staff judge advocate claims data, marine casualty reports, casualty reports, and emergency operation center reports.			
9	Does the safety office identify trends and problem areas to develop injury prevention countermeasures by disseminating command accident data?			
	Standard: TRADOC Regulation 385-2, paragraph 2-7b(3).			
	Documentation: Reports, briefs, or meeting minutes addressing accident analysis and trends.			
10	Does the safety office maintain Occupational Safety and Health Administration (OSHA) Form 300 (Work-Related Injuries and Illnesses) and post a copy of the OSHA Form 300-A?			
	Standard: 29 CFR 1904.7(b)(3); AR 385-10, paragraph 3-8b(3)(b); TRADOC Regulation 385-2, paragraph 2-7c.			
	Documentation: Copy of OSHA Form 300 or equivalent and copy of OSHA Form 300-A.			

	Accident investigation, reporting, and analysis (continued)	**YES**	**NO**	**Remarks**
11	Are all accidents/incidents in support of TRADOC's mission immediately reported on DA Form 7305-R (Worksheet for Telephonic Notification of Aviation Accident/Incident) or DA Form 7306-R (Worksheet for Telephonic Notification of Ground Accident) through appropriate channels to the TRADOC Safety Office?			
	Standard: TRADOC Regulation 385-2, paragraph 2-2(b).			
	Documentation: Reports on hand.			
12	Are all Class A and B on-duty accidents investigated by an accident investigation board?			
	Standard: AR 385-10, paragraph 3-14a; TRADOC Regulation 385-2, paragraph 2-5.			
	Documentation: Written accident investigation board results.			
13	Are accident findings and recommendations from the U.S. Army Combat Readiness Center/Safety Center (USACR/SC) concerning branch issues and systems resolved in a timely manner?			
	Standard: DA Pam 385-40, paragraph 4-3.			
	Documentation: Documentation of corrective action taken.			
14	Does the safety director provide the TRADOC Exposure Report on a quarterly basis to the TRADOC Safety Office? The completed report, reflecting the previous quarter's accident data, is due to the TRADOC Safety Office by 15 Jan, 15 Apr, 15 Jul, and 15 Oct.			
	Standard: TRADOC Regulation 385-2, paragraph 2-7(d).			
	Documentation: Documentation of completed TRADOC Exposure Reports.			

B-6. Branch and proponency

Integration of safety and CRM into doctrine, organizations, training, materiel, leadership, education, personnel, and facilities is inherent in the worldwide branch mission.

a. Per TRADOC standard, designate the qualified command safety and occupational health manager as the branch safety manager. The branch safety manager should work for, be rated by, and report directly to the commander, school commandant, or the respective chief of staff.

b. Combine TRADOC mission and branch safety assets into a mission/branch safety office and fund and staff in accordance with the appropriate manpower standards.

c. The safety office covers the full spectrum of occupational safety and health, systems safety, schoolhouse support, CRM integration, and worldwide branch safety proponency. The self-assessment checklist for branch safety is provided at table B-6.

Table B-6 Branch and proponency

		YES	NO	Remarks
1	Are accident findings and recommendations from the USACR/SC concerning branch issues and systems resolved in a timely manner?			
	Standard: DA Pam 385-40, paragraph 4-3.			
	Documentation: Documentation of corrective action taken.			
2	Is CRM integrated into school products, operations, branch systems/materiel and reviewed by the designated SOH officer and/or systems safety engineer?			
	Standard: TRADOC Regulation 385-2, paragraph 1-5.			
	Documentation: School products (for example, technical manuals, field manuals, TSPs, lesson plans, policy, and doctrine).			
3	Do the safety and occupational health specialist and/or systems safety engineer maintain a hazard tracking system to identify and track proponent system hazards?			
	Standard: TRADOC Regulation 385-2, paragraph 4-2b.			
	Documentation: Written or electronic lists of reported systems hazards.			

	Branch and Proponency (continued)	**YES**	**NO**	**Remarks**
4	Are all hazards controlled by procedures or training addressed in the training manual and technical manuals for those systems?			
	Standard: AR 385-10, paragraph 1-4p(3).			
	Documentation: Lesson plans, program of instructions, and technical manuals.			
5	Are instructors, cadre, training developers, combat developers and drill sergeants trained in the application of the CRM process? How was this training accomplished?			
	Standard: AR 385-10, chapter 10; TRADOC Regulation 350-70.			
	Documentation: Attendance rosters, certificates of completion.			
6	Is CRM applied to all training and approved at the appropriate level, and is a current copy of the risk assessment worksheet maintained at the training site?			
	Standard: AR 385-10, paragraph 10-1; TRADOC Regulation 350-6, paragraph 3-27.			
	Documentation: Observe training, review deliberate, and daily risk assessments.			
7	Have the requirements of DA Pam 385-30 been applied to the hazard assessment, prioritization, and correction processes?			
	Standard: AR 385-10, paragraph 17-4.			
	Documentation: Copy of hazard assessment and RAC assignments.			

	Branch and Proponency (continued)	YES	NO	Remarks
8	Does the school monitor the development of branch specific material and develop a position on materiel developer's system safety risk assessment for proponent materiel systems and materiel changes?			
	Standard: AR 385-10, paragraph 9-2; DA Pam 385-16, paragraph 2-6; TRADOC Regulation 385-2, paragraph 4-2b(1).			
	Documentation: Memorandum stating position.			
9	Is CRM techniques applied to eliminate or control hazards associated with proponent products/systems/materiel?			
	Standard: TRADOC Regulation 385-2, paragraph 1-5.			
	Documentation: Policy, technical manuals, field manuals, memorandums, and safety of use messages.			
10	Have school documents and training products such as TSPs, lesson plans, field manuals, technical manuals, reviewed by the designated safety and occupational health official.			
	Standard: TRADOC Regulation 385-2, paragraph 1-5f(1). TRADOC Regulation 350-6, paragraph 3-27a(2).			
	Documentation: Documents signed by safety and occupational health official.			
11	Are instructors, cadre, drill sergeants, supervisors, training developers trained in the application of the CRM process? How was this training accomplished?			
	Standard: TRADOC Regulation 385-2, paragraph 1-5.			
	Documentation: Attendance rosters, certificates of completion, and lesson plans.			

	Branch and Proponency (continued)	**YES**	**NO**	**Remarks**
12	Is CRM integrated into all technical and leader development training within the branch?			
	Standard: TRADOC Regulation 385-2, paragraph 1-5e.			
	Documentation: TSP, lesson plans, and training schedules.			
13	Is CRM conducted for all training and approved at the appropriate level, and is a current copy of the risk assessment worksheet maintained at the training site?			
	Standard: TRADOC Regulation 385-2, paragraph 1-5d(4).			
	Documentation: Observe training, review deliberate, and daily risk assessments.			
14	Are RACs assigned to each lesson plan and TSPs?			
	Standard: TRADOC Regulation 385-2, paragraph 1-5c.			
	Documentation: Risk assessment codes are assigned to lesson plans, TSPs.			

B-7. Initial Military Training(IMT)/military training, operations and tactical safety

a. The safety of the IMT Soldier is critical to the success of the TRADOC mission to provide the Army with military occupational specialty qualified Soldiers. Initial entry Soldiers are subject to stress and risk in the IMT environment because the living conditions, physical demands, and training tasks are unfamiliar and the Soldier is untried.

b. Close, consistent oversight and supervision by qualified drill sergeants, platoon sergeant, instructors, and cadre; responsive medical support; and living and training facilities free from known hazards are inherent requirements of the safety structure in place to protect the IMT Soldier. An effective mission-oriented safety program, together with regular, standardized evaluations of the IMT environment, effective training programs, and enforcement of training standards ensures a successful soldierization program that sets high standards, provides positive role models, and reinforces essential Soldier skills.

c. The safety and the use of CRM is paramount to the training Soldier due to the high-risk training events that may be in encountered in advance or specialty schools such as drill sergeant, airborne, and ranger. The use of CRM is a vital component to safely train Soldiers while ensuring that training is realistic.

d. The risk level associated with all military training within Army and TRADOC schools are based upon a predetermined number of qualified instructors, when the ratio of students to instructors changes, the risk assessment must be relooked to ensure that the level of risk for the training remains within acceptable limits. Use table B-6 as a guideline for self-assessment in these areas.

Table B-7 IMT/military training, operations and tactical safety

		YES	NO	Remarks
1	Does the safety office maintain a list of high-risk training? Do safety office personnel review training products for CRM integration?			
	Standard: TRADOC Regulation 385-2, paragraph 1-4h(5).			
	Documentation: School products (i.e., technical manuals, field manuals, TSPs, lesson plans, policy, doctrine, etc.). List of all high-risk training events/risk assessments for all high-risk training.			

	IMT/military training, operations and tactical safety (continued)	**YES**	**NO**	**Remarks**
2	Are there sufficient instructors/assistant instructors present to conduct training in accordance with the requirements of the subject TSPs?			
	Standard: TRADOC Regulation 350-6, paragraph 3-4(a).			
	Documentation: Copy of TSP and lesson plans.			
3	When the number of instructors and/or assistant instructors drops below the number specified in the TSP, is the risk assessment updated and approved at the appropriate level?			
	Standard: TRADOC Regulation 350-6, paragraph 3-4.			
	Documentation: Updated risk assessment.			
4	Are drill sergeant ratios maintained in accordance with TRADOC standards?			
	Standard: TRADOC Regulation 350-16, paragraph 2-14.			
	Documentation: Copies of company status report.			
5	Are drill sergeants assigned additional duties that divert them from their primary mission of training Soldiers?			
	Standard: TRADOC Regulation 350-16, paragraph 2-9a.			
	Documentation: Copies of additional duty appointment orders and or duty rosters for drill sergeant.			
6	Is a minimum of one certified combat lifesaver (CLS) drill sergeant or cadre member and one CLS aid bag present during training per platoon?			
	Standard: TRADOC Regulation 350-6, paragraph 3-32.			
	Documentation: Drill sergeant/cadre training records,			

	spot check CLS bags.			
	IMT/military training, operations and tactical safety (continued)	**YES**	**NO**	**Remarks**
7	Are CLSs equipped with the appropriate supplies available to provide the necessary first aid and emergency medical care?			
	Standard: TRADOC Regulation 350-6, paragraph 3-32.			
	Documentation: Spot check CLS bags.			
8	Does the commander/commandant address medical support requirements in the planning, preparation, and execution of all training activities?			
	Standard: TRADOC Regulation 350-6, Appendix H.			
	Documentation: Written plan, policy, regulation (the goal for Medical Support to Training is for injured personnel to be at an emergency medical support facility within 1 hour).			
9	Has the commander/commandant assessed and certified the adequacy of their medical support to training at least annually to ensure the capability of ground and air medical evacuation?			
	Documentation: CRM worksheet, memorandum.			
	Standard: TRADOC Regulation 350-6, paragraph 3-31c; TRADOC Regulation 385-2, paragraph 11-4b(3).			
10	Has the commander/commandant rehearsed their medical support plan (casualty response, evacuation, and treatment) for high-risk training at least semiannually, with focus on responding to a training catastrophe?			
	Standard: TRADOC Regulation 350-6, paragraph 3-31c; TRADOC Regulation 385-2, paragraph 11-4b(3).			
	Documentation: Copies of exercise after action reports.			

	IMT/military training, operations and tactical safety (continued)	**YES**	**NO**	**Remarks**
11	Are instructors and cadre qualified in the proper operation and training on the rappel tower, obstacle, confidence, bayonet, and pugil courses?			
	Standard: TRADOC Regulation 350-6, paragraph 3-1e.			
	Documentation: Copy of instructor certification.			
12	Are physical training structures inspected for structural integrity and maintained to standard?			
	Standard: Training Circular 21-24.			
	Documentation: Copy of structural inspection and visual spot check.			
13	Is CRM integrated into all technical and leader development training and operations throughout the professional military and civilian education programs?			
	Standard: AR 350-1, table G-2; TRADOC Regulation 385-2, paragraph 1-5.			
	Documentation: TSP, lesson plans, training schedules, etc.			
14	Is CRM applied to all training and approved at the appropriate level, and is a current copy of the risk assessment worksheet maintained at the training site?			
	Standard: TRADOC Regulation 350-6, paragraph 3-27; TRADOC Regulation 385-2, paragraph 1-5.			
	Documentation: Observe training, review deliberate, and daily risk assessments.			

	IMT/military training operations and tactical safety (continued)	**YES**	**NO**	**Remarks**
15	Does the risk assessment maintained at the training site reflect current conditions?			
	Standard: TRADOC Regulation 385-2, paragraph 1-5; TRADOC Regulation 350-70, chapter I-2.			
	Documentation: Copy of current risk assessment.			
16	Is there a lesson plan/TSP at ranges and training areas?			
	Standard: TRADOC Regulation 350-70.			
	Documentation: Copy of the lesson plan/TSP.			
17	Is there adequate billeting floor space per trainee (72 net square feet per Basic Combat Training (BCT)/One Station Unit Training Soldier (OSUT); 90 net square feet per Advance Individual Training (AIT) Soldier is the desired goal, unless the Advance Individual Training is located at an Army Training Center)?			
	Standard: TRADOC Regulation 350-6, paragraph 3-36a(4)a-e.			
	Documentation: Floor plans, visual inspection, etc.			
18	Has commander ensured that military personnel involved in training in or around water are swim tested and non-swimmers are identified?			
	Standard: TRADOC Regulation 385-2, paragraph 9-2a(1).			
	Documentation: Swim test results and SOP .			

	IMT/military training operations and tactical safety (continued)	YES	NO	Remarks
19	Does safety director provide staff oversight of the water program to include monitoring appropriate cadre/staff to ensure all instructors involved in teaching or overseeing training or operations in or around water receive training in water operations and hazards before teaching students?			
	Standard: AR 385-10, 13-8; DA Pam 385-10 chapter 12; TRADOC Regulation 385-2, paragraph 9-2 b(1)(2).			
	Documentation: Regulation, SOPs, audits, training schedules, and attendance rosters.			
20	Do commanders in the grade of O-6 and above approve deviations from SOP/TSP, and lesson plans for tactical water operations?			
	Standard: AR 385-10, paragraph 13-8.			
	Documentation: SOP, TSP, policy for deviation.			
21	Has commander/commandant established directives addressing specific safety procedures/requirements for all tactical water training or operations prior to conducting water operation?			
	Standard: AR 385-10 paragraphs 13-8, 22-1; TRADOC Regulation 385-2, paragraph 9-2a(3).			
	Documentation: Regulation, SOP, and memorandums.			
22	Are the following environmental hazard assessed using CRM process and appropriate methods taken to minimize risk? High altitude; disease vectors; contaminated food and water; poor air quality; heat; cold.			
	Standard: AR 385-10, paragraph 13-9.			
	Documentation: Regulation, SOP, memorandum, risk assessment.			

	IMT/military training operations and tactical safety (continued)	YES	NO	Remarks
23	Does commander enforce discipline in bivouac areas to minimize accidents and provide procedures for: Site selection; camouflage; field sanitation; generators; field mess operations; storage of flammables; fire extinguishers; grounding of equipment; restriction/control of motor vehicles?			
	Standard: AR 385-10, paragraph 13-10.			
	Documentation: TSP, SOP, regulation, risk assessment worksheet.			
24	Does commander ensure that all combative training is conducted by certified instructors of the appropriate level and adhere to the CRM process and instructional framework?			
	Standard: AR 350-1, paragraph 1-25d.			
	Documentation: TSP, lesson plan, SOP, instructors' certifications.			
25	Is the required protective equipment available, serviceable, and in the appropriate sizes to fit training Soldier?			
	Standard: TRADOC Regulation 350-6, Appendix K-6.			
	Documentation: Visually inspect protective equipment to ensure it is available in sizes appropriate to the needs of the training.			
26	Are only space heaters authorized by the U.S. Army Soldier Systems Center in use?			
	Standard: TRADOC Regulation 385-2, paragraph 11-3.			
	Documentation: Regulation SOP, memorandum, and observation.			

	IMT/military training operations and tactical safety (continued)	**YES**	**NO**	**Remarks**
27	Are traffic and column guards provided with serviceable reflective vests or belts?			
	Standard: TRADOC Regulation 385-2, paragraph 8-9.			
	Documentation: Observation.			
28	Is vehicle access to running routes controlled during physical training hours?			
	Standard: TRADOC Regulation 385-2, paragraph 8-7b.			
	Documentation: Observation.			
29	Do commanders/commandants have a severe weather/lightning protection plan prepared on hand for each field training site and/or range?			
	Standard: TRADOC Regulation 385-2, paragraph 11-6.			
	Documentation: Written plan on hand.			

B-8. Systems safety

System safety applies engineering and management principles, criteria, and techniques to achieve acceptable mishap risk, within the constraints of operational effectiveness, time, and cost, throughout all phases of the life cycle of systems or facilities. Commanders implement system safety engineering and management policies consistent with their missions. Apply and tailor system safety to all Army systems and facilities and integrate system safety into other manpower and personnel integration concerns. A systems safety checklist is provided at table B-8.

Table B-8 Systems Safety

		YES	NO	Remarks
1	Has the commander implemented a system safety engineering and management policy consistent with the proponent mission?			
	Standard: AR 385-10, paragraph 9-2; DA Pam 385-16 paragraphs 1-4, 5-1, 5-3 and 5-4; TRADOC Regulation 385-2, paragraph 4-2.			
	Documentation: Copy of system safety engineering and management policy and knowledge of policy at directorate and unit level.			
2.	Does the system safety engineer on the table of distribution and allowances meet the OPM standards for safety engineer GS-0803 series?			
	Standard: DA Pam 385-10, paragraph 3-2a(2), table 3-1.			
	Documentation: Review systems safety engineer job description.			
3	Is systems safety represented in all phases of combat developments?			
	Standard: AR 385-10, paragraph 9-8; DA Pam 385-16, paragraph 1-4a; TRADOC Regulation 385-2, paragraph 4-2b.			
	Documentation: Material requirement documents. Evidence of coordination with proponent Directorate of Combat Development.			

	Systems Safety (continued)	YES	NO	Remarks
4	Does safety office ensure safety of use message, ground precautionary messages, safety of flight, and aviation safety action messages to include safety releases, confirmations, and assessments are disseminated?			
	Standard: DA Pam 385-16.			
	Documentation: Copies of message are at unit level, combat developers, and/or proponent school for action.			
5	Does the safety office have a process to ensure a safety release is disseminated to the user prior to pretest troop training for local tests, experiments, appraisals, and demonstrations involving troops and Soldier support equipment?			
	Standard: TRADOC Regulation 385-2, paragraph 4-3d(2).			
	Documentation: Copy of safety release, SOP, written procedures, and policies.			
6	Are processes established to review and ensure that all residual hazards controlled by procedures or training are addressed in the training products and associated publications for those systems?			
	Standard: AR 385-10, paragraph 1-4p(3), 9-2a, 9-2j; DA Pam 385-16.			
	Documentation: Residual hazards addressed in program of instructions, lesson plans, and field manuals. Review or validation on hand.			
7	Does school/proponent/system safety review all modifications of mission profiles and capability documents for safety impact and are the results reported to the combat developer?			
	Standard: DA Pam 385-16.			

	Documentation: Policy on review of mission profile modifications and capability documents.			
	Systems safety (continued)	**YES**	**NO**	**Remarks**
8	Upon discovering an unsafe condition with a piece of Army equipment does the unit/school/branch, notify the proponent command of the system and the TRADOC Safety Systems Engineer?			
	Standard: DA Pam 385-16.			
	Documentation: Copy of notification to proponent. Systems engineer or representative has documentation.			
9	Does unit/school/proponent identify, through the accident reporting system, inadequacies contributing to an accident and analyze these inadequacies to ensure that safety compromising trends are identified?			
	Standard: DA Pam 385-16.			
	Documentation: Accident report equipment analysis, Safety of Use Message, Ground Precautionary Messages, etc.			
10	Does the commander/commandant ensure that equipment safety risks are accepted at a level of management authority commensurate with the risk in accordance with AR 70-1 and DA Pam 385-30?			
	Standard: AR 70-1, paragraph 1-5; AR 385-10, paragraph 9-2(i); DA Pam 385-30, paragraph 4-11g; TRADOC Regulation 385-2, paragraph 4-3.			
	Documentation: System Safety Risk Assessment for all risks exceeding the criteria for “low” risk.			
11	Are preliminary hazard lists developed to identify specific hazards during the concept phase for development of systems?			
	Standard: DA Pam 385-16.			

	Documentation: Copy of preliminary hazard lists for new systems under development.			

	Systems safety (continued)	**YES**	**NO**	**Remarks**
12	Do safety office personnel participate in Systems Safety Working Groups, if applicable?			
	Standard: TRADOC Regulation 385-1, paragraph 4-2; DA Pam 385-16.			
	Documentation: Written or electronic lists of reported systems hazards and attendance of systems safety working group.			

B-9. Range, explosive, and ammunition safety

The degree of success of the ammunition surveillance and explosives safety programs depends upon management visibility, organizational structure, and quality assurance specialist, ammunition surveillance (QASAS) personnel staffing to mitigate a hazardous situation. The ultimate goal is to ensure ammunition and explosives are safe and serviceable for storage, transportation, and use by Soldiers.

a. Commanders should ensure that the QASAS/explosives safety functions are staffed with sufficient qualified personnel to support the mission and to provide for daily ammunition surveillance and explosives safety operations as required by Army standards.

b. Commanders should ensure that QASAS personnel and safety specialists are provided required refresher training to keep up to date with the latest weapon and ammunition technology.

c. An effective range safety program will:

(1) Enhance safe, realistic, live-fire training.

(2) Prevents fratricide in live-fire training.

(3) Protect civilian and military populations who live and work in the vicinity of live-fire training ranges.

(4) Protect the environment from the effects of live-fire training.

d. Commanders will develop range safety regulations and/or SOPs, integrating appropriate CRM processes and procedures.

e. Qualified safety specialists should inspect all explosives and training complexes on a semiannual basis. High-risk training operations should be inspected more often as the risk dictates.

f. Report and investigate all incidents or accidents involving Arms, Ammunition and Explosives with firing units.

g. Commander should use the self-assessment checklist in table B-9 to ensure their program meets all applicable guidance.

Table B-9 Range, explosive, and ammunition safety

		YES	NO	Remarks
1	Has the commander/commandant established a Range Safety Program?			
	Standard: AR 385-63, paragraph 1-4p.			
	Documentation: Range safety program documents.			
2	Has the commander/commandant established an Explosive Safety Management Program?			
	Standard: AR 385-10, paragraph 5-1 and DA Pam 385-64, paragraph 1-5b.			
	Documentation: Explosive safety program documents.			
3	Has the commander/commandant established a Memorandum of Agreement (MOA) or policy that outlines the Explosive Safety Management Program requirements and responsibilities of both garrison and mission?			
	Standard: AR 385-10, paragraph 5-1 and DA Pam 385-64, paragraph 1-5c(1).			
	Documentation: Explosive safety program policy and MOA documents.			
4	Has the commander/commandant ensured the explosive/range safety staff is appropriate for the unit's mission and are they properly trained and qualified?			
	Standard: AR 385-10, paragraph 5-1 and DA Pam 385-64, paragraphs 1-5b, 1-5c.			
	Documentation: Unit Table of Distribution and Allowance and Assignment rosters, Training Records.			
5	Has the commander forwarded a copy of range deviations, Certificates of Risk Acceptance, and Certificates of Compelling Reason to HQ TRADOC Safety?			
	Standard: TRADOC Regulation 385-2, paragraph 6-3b.			

	Documentation: Range deviation log.			

	Range, explosive, and ammunition safety (continued)	YES	NO	Remarks
6	Are range deviations, Certificates of Risk Acceptance, and Certificate of Compelling Reasons current, complete, and approved at the appropriate level?			
	Standard: AR 385-63, paragraph 3-2; DA Pam 385-63, paragraph 1-5; DA Pam 385-64, paragraph 1-13, TRADOC Regulation 385-2, paragraph 6-3a.			
	Documentation: Copy of all range deviations, Certificates of Risk Acceptance and Certificate of Compelling Reasons.			
7	Does the safety office review all new TRADOC range/explosive facilities construction and are they coordinated thru garrison safety for site planning and to ensure that the installation master plan is annotated with Explosive Safety Management Program requirements?			
	Standard: AR 385-10, paragraph 5-5, DA Pam 386-64, paragraphs 1-6b(8), (12), (14), and 1-11, TRADOC Regulation 385-2, paragraph 6-2b(8),(9).			
	Documentation: Range safety SOP, copy of range waivers, and proof of safety office review of new range/explosive facilities construction.			
8	Are properly approved explosive safety site plans available and up-to-date for storage facilities?			
	Standard: DA Pam 385-64, chapter 4.			
	Documentation: Validate installation explosive safety site plans for accuracy.			
9	Is a process in place that ensures that the CRM process is applied to all training/operations prior to occupying range complex or explosive facilities?			
	Standard: AR 385-63, paragraph 2-7, AR 385-10, paragraph 5-3.			

	Documentation: Standard, SOP, or risk assessment.			

	Range, explosive, and ammunition safety (continued)	**YES**	**NO**	**Remarks**
10	Are commanders complying with installation special use airspace requirements for live-fire training?			
	Standard: AR 385-63.			
	Documentation: Range regulations/SOP.			
11	Are new baffled firing ranges approved by the appropriate command?			
	Standard: AR 385-63, paragraph 2-2c.			
	Documentation: Approval letter.			
12	Does the commander/commandant have a process for approving “burst offset” firing techniques?			
	Standard: DA Pam 385-63, paragraph 5-2b.			
	Documentation: Approval process for “burst offset” firing techniques.			
13	Has commander/commandant established procedures for the approval of nonstandard ammunition before purchase?			
	Standard: AR 385-63, paragraph 2-3.			
	Documentation: Nonstandard ammunition approval process.			
14	Are ammunition and explosives stored in licensed locations and quantity/distance limits maintained?			
	Standard: AR 385-10, paragraph 5-7; DA Pam 385-64, chapter 5.			
	Documentation: Review installation Standard Army Ammunition System-Modification explosives safety			

	report.			
	Range, explosive, and ammunition safety (continued)	**YES**	**NO**	**Remarks**
15	Are ammunition and explosives storage facilities inspected annually?			
	Standard: AR 385-10, paragraph 5-7; DA Pam 385-64, paragraph 1-9.			
	Documentation: Review inspection reports by QASAS and safety for findings and recommendations.			
16	Were lightning protection system and bonding for explosive facilities visually inspected and electrically tested IAW DA Pam 385-64, appendix D?			
	Standard: DA Pam 385-64, paragraphs 17-27, 17-28, and 17-29.			
	Documentation: Review lightning protection system inspection records and electrical test results.			
17	Are the correct storage fire/chemical symbols displayed?			
	Standard: DA Pam 385-64, paragraphs 6-14 and 6-16.			
	Documentation: Visually check storage sites/facilities to verify correct signage.			
18	Are SOPs developed, current, and used for all arms, ammunition and explosives operations?			
	Standard: DA Pam 385-64, paragraph 2-4.			
	Documentation: Review of SOP to ensure workers have information necessary to perform their task safely and that required procedures are identified.			
19	Have personnel working with or transporting arms, ammunitions and explosives received required training?			
	Standard: AR 385-10, chapter 10-10b; DA Pam 385-64, paragraph 1-8, and 20-2.			

	Documentation: Review training rosters.			

B-10. Radiation safety

a. The TRADOC Radiation Protection Program safeguards personnel from unnecessary exposure to ionizing and non-ionizing radiation through:

(1) Control of radiation sources.

(2) Personnel training.

(3) Surveys and monitoring.

(4) Documentation of radiation emissions.

(5) Medical examinations and bioassays.

b. Commanders should ensure there is positive control of potential health hazards resulting from the procurement, possession, storage, transportation, use, and disposal of radioactive materials or equipment capable of producing potentially hazardous ionizing or non-ionizing radiation. The checklist at table B-10 is provided to assist in this effort.

Table B-10 Radiation safety

		YES	NO	Remarks
1	Does the commander/commandant have a radiation safety program?			
	Standard: AR 385-10, paragraph 1-4m(9), 7-2a.			
	Documentation: Radiation safety SOP.			
2	Does the commander/commandant designate, in writing, a radiation staff safety officer?			
	Standard: AR 385-10, paragraph 1-4m(5).			
	Documentation: Radiation staff safety officer appointment memorandum.			

	Radiation Safety (continued)	YES	NO	Remarks
3	Has the commander forwarded a copy of radiation deviations to HQ TRADOC?			
	Standard: AR 385-10, paragraph 1-4m(9); DA Pam 385-24, paragraph 1-4i(5)(b).			
	Documentation: Central registration of deviations.			
4	Has the commander/commandant established written policies and procedures for radioactive commodities as necessary to ensure compliance with radiation safety requirements in applicable technical publications?			
	Standard: AR 385-10, paragraph 7-2a.			
	Documentation: Radioactive commodities policy and procedures.			
5	Does the commander/commandant ensure compliance with conditions of Army Materiel Command (AMC)-held radioactive commodity Nuclear Regulatory Commission (NRC) licenses and Army Radiation Authorizations (ARA) to include ensuring all personnel using radioactive material are aware of applicable regulations and conditions as appropriate?			
	Standard: AR 385-10, paragraph 7-2b.			
	Documentation: SOPs for AMC-held radioactive commodities.			
6	Does the command have approved applications for new, renewals, or amendments to ARA?			
	Standard: AR 385-10, paragraph 7-6, DA Pam 385-24 paragraphs 1-4i(1) and 1-4i(3).			
	Documentation: Copy of ARAs/amendments.			

	Radiation safety (continued)	**YES**	**NO**	**Remarks**
7	Does the commander/commandant ensure that all the NRC licenses, ARAs, and Army Radiation Permits for radioactive materials and machine produced ionizing radiation equipment are available?			
	Standard: AR 385-10, paragraph 7-5a.			
	Documentation: Copy of license, authorizations, permits.			
8	Is the commander/commandant in compliance with appropriate NRC licenses and ARA requirements?			
	Standard: AR 385-10, paragraphs 7-2b, 7-6b; DA Pam 385-24, paragraphs 1-4j(6), 1-4i(1).			
	Documentation: Copy of current NRC/ARA license.			
9	Has the commander/commandant established written policies and procedures to assure compliance with applicable Federal, DOD, and Army radiation safety regulations and directives?			
	Standard: AR 385-10, paragraph 7-2.			
	Documentation: Policies and procedures for radiation safety (emergency reaction plans as necessary and procedures for investigating and reporting radiation accidents, incidents, and overexposures).			

	Radiation safety (continued)	YES	NO	Remarks
10	Does the commander/commandant assure that an internal (for example, the Radiation Safety Officer (RSO) or local acting Inspector General) or external agent (for example, the Surgeon General or an RSO from another command) or agency audits the radiation safety program annually?			
	Standard: DA Pam 385-24, paragraphs 1-4j(6), 1-4i(5)(d); 1-4k(2)(c).			
	Documentation: Audit report.			
11	Has the commander/commandant established an installation Radiation Safety Committee? (as per NRC license requirements or as need dictates, the Radiation Safety Committee provide information on issues to command and are audited by command)			
	Standard: AR 385-10, paragraph 2-23c(1).			
	Documentation: Installation Radiation Safety Committee meeting minutes.			
12	Does the commander/commandant maintain an inventory of radiation sources as higher headquarters directs and in accordance with requirements of NRC licenses, Army reactor permits, Army radiation authority, and technical publications?			
	Standard: AR 385-10, paragraph 7-5g.			
	Documentation: Inventory of radiation sources.			

	Radiation safety (continued)	YES	NO	Remarks
13	Has the commander/commandant established and employed procedures to assure that captured, purchased, borrowed, or otherwise obtained foreign equipment and materiel are surveyed for radioactive material and that appropriate actions are taken following discovery of any radioactive material in those items?			
	Standard: AR 385-10, paragraphs 1-4m, 7-5i.			
	Documentation: SOP for foreign equipment and materials.			
14	Has the commander/commandant established and employed procedures to ensure that there is a Light Amplification by Stimulated Emission of Radiation (LASER) Safety Program established and a designated LASER Safety Officer in writing?			
	Standard: DA Pam 385-24, paragraphs 1-4k(1), 1-4k(2).			
	Documentation: LASER Safety Policy.			
15	Does the commander/commandant maintain an inventory of Class 3b and Class 4 LASER as higher headquarters directs and in accordance with requirements?			
	Standard: DA Pam 385-24, paragraph 3-1h.			
	Documentation: Policies and procedures for non-ionizing radiation safety.			
16	Does the commander/commandant ensure LASER accidents are reported to the Tri-service hotline and the United States Army Public Health Command (Provisional) and follow accident reporting procedures?			
	Standard: DA Pam 385-24, paragraph 5-3a; DA Pam 385-40, paragraph 5-4c(2)(b).			
	Documentation: Policies and procedures for non-ionizing radiation safety.			

	Radiation safety (continued)	YES	NO	Remarks
17	Does the commander/commandant report excess "military-exempt" LASERs to the Defense Reutilization and Marketing Service for utilization screening within DOD?			
	Standard: DA Pam 385-24, paragraph 1-4i(6).			
	Documentation: Excess military-exempt LASER SOP.			
18	Has the commander/commandant established and employed procedures to ensure that there is a Radiofrequency Radiation (RFR) Safety Program established and have designated a RFR Safety Officer in writing?			
	Standard: DA Pam 385-24, paragraphs 1-4k(1) and 1-4k(2).			
	Documentation: RFR safety policy and procedures.			
19	Does the commander/commandant ensure RFR accidents are reported to United States Army Public Health Command (Provisional) and follow accident reporting procedures?			
	Standard: DA Pam 385-24, paragraph 6-1a(3)(b); DA Pam 385-40, paragraph 5-4c(2)(a).			
	Documentation: RFR safety policy and procedures.			
20	Are radiation handlers/users trained in safe working conditions and operating procedures in accordance with applicable regulations and directives?			
	Standard: AR 385-10, paragraph 10-10a.			
	Documentation: Lesson plans, training roster, and schedule of classes.			

	Radiation safety (continued)	**YES**	**No**	**Remarks**
21	Do radiation safety officers receive required radiation protection training? Has training been completed before RSO/LASER Safety Officer/RFR Safety Officer assumes the Radiation Safety Program responsibilities? Is refresher training occurring annually/and retraining after significant regulatory change or every 5 years?			
	Standard: AR 385-10, paragraph 10-10; DA Pam 385-24, paragraph 1.			
	Documentation: Certificate of completion of refresher training; lesson plans/program of instructions/TSPs and schedule of classes.			

B-11. Aviation safety

a. Aviation operations are an important part of TRADOC operations. Aviation safety is a major subprogram of the Army Safety and Occupational Health Program and provides increased combat power and efficiencies for the commander. Aviation is an inherently dangerous business with many facets of mission risk. This makes safety at all levels of utmost importance. Aviation Safety Program requirements apply to all Army operations and personnel participating in aviation activities and to all who operate and/or maintain Army aircraft (manned or unmanned). TRADOC organizations conducting/supporting aviation operations will have an active and effective aviation safety program with fully engaged leadership.

b. Table B-11 applies to all TRADOC aviation units (both manned and unmanned) and TRADOC units with aviation assets assigned.

Table B-11 Aviation safety

		YES	NO	Remarks
1	Is there a school trained aviation safety officer (ASO) assigned to the TDA, Table of Organization and Equipment, Modified Table of Organization and Equipment; authorized full-time position?			
	Standard: DA Pam 385-90, paragraph 1-4j(2).			
	Documentation: Copy of TDA.			
2	Is there a safety-trained NCO or qualified individual appointed by the unit commander, in writing, to assist the safety manager in aviation units?			
	Standard: DA Pam 385-90, paragraph 1-4j (3)(d).			
	Documentation: A certificate of completion from a sanctioned Safety Course and appointment orders for the safety NCO or alternate to the ASO.			

	Aviation safety (continued)	**YES**	**NO**	**Remarks**
3	Has an appropriately trained additional duty aviation safety officer been appointed in aviation organizations without authorized ASO positions, and in non-aviation organizations, not staffed with full-time safety personnel to perform safety and accident prevention functions for the commander?			
	Standard: DA Pam 385-90, paragraph 1-4j(3)(c); AR 385-10, paragraph 2-6d/2-7g; DA Pam 385-10, paragraph 3-3f.			
	Documentation: Check appointment orders and ADSO course completion certificate (within 90 days of appointment).			
4	At brigade level and below, does the ASO work directly for and is rated by the commander?			
	Standard: DA Pam 385-90, paragraph 1-4j (3); AR 385-10, paragraph 2-7g.			
	Documentation: Unit rating scheme.			
5	Has the commander established a written safety philosophy that incorporates goals, objectives, and priorities? Is it in the quarterly training guidance?			
	Standard: DA Pam 385-90, paragraph 2-3; DA Pam 385-90, paragraph 1-4j(5); AR 385-10, paragraph 15-2a(2).			
	Documentation: Check the commander's safety philosophy for completeness.			
6	Does the ASO maintain current unit safety functional files and are procedures for safety files and administration established in the SOP?			
	Standard: AR 25-400-2, paragraph 1-7, https://www.arims.army.mil/; AR 385-10, paragraph 16-2, DA Pam 385-90 paragraph 2-10f.			

	Documentation: Functional files and SOP.			
	Aviation safety (continued)	**YES**	**NO**	**Remarks**
7	Does the safety manager maintain a current library of safety regulations, accident prevention directives, and instructional materials?			
	Standard: DA Pam 385-90, paragraph 1-4m(6)(h) and Appendix A.			
	Documentation: Check access to current regulations in printed or electronic format. Recommending printed copies of the minimum daily core regulations (385 series).			
8	Does the ASO maintain safety bulletin boards with: (1) The names of the Commander, ASO, and Aviation Safety NCO (2) The names of command support and safety-related program managers (3) The most recent Commander's Safety Council and Executive Safety Council, as applicable); (4) The unit and next higher Commanders' Safety Philosophies; (5) Blank DA Forms 2696, Operational Hazard Report (OHR); (6) Blank DA Forms 4755s?			
	Standard: DA Pam 385-90, paragraphs 1-4m(5), 2-4f.			
	Documentation: Check all safety bulletin boards with current minutes posted.			
9	Has the safety manager established written procedures for the awards program, to include procedures for impact awards?			
	Standard: AR 385-10, paragraph 8-5; DA Pam 385-90, paragraph 1-4 (m)(6)(q); DA Pam 385-10, paragraph 1-6.			
	Documentation: Verify all applicable safety awards programs are functioning. Policy and evidence of issue during the evaluation period (unit, individual, impact, flight, and safe drivers). Ensure the program is funded down to the unit level. Review the SOP to find if this area is covered. If this area is not recognized, ask the ASO.			

	Aviation safety (continued)	YES	NO	Remarks
10	Does the safety manager maintain historical documentation of awards presented to the unit and individuals?			
	Standard: AR 25-400-2, paragraph 1-7 and record number 385-10gg2.			
	Documentation: Check for historical records of awards being presented to the unit and individuals and maintained on file for 2 years.			
11	Does the command have a crew endurance program included in the standard operating procedures? Is the crew endurance policy being adhered to?			
	Standard: AR 25-400-2, paragraph 1-7a, b, https://www.arims.army.mil/; DA Pam 385-90 paragraph 2-10f.			
	Documentation: SOP or policy letters and risk assessment worksheets.			
12	Does the ASO ensure CRM worksheets are completed and reviewed for all training/operations?			
	Standard: TRADOC Regulation 385-2, paragraph1-5d(4).			
	Documentation: Spot check current operations and inspect historical records.			
13	Does the commander clearly specify in writing, safety duties for staff officers, subordinate commanders, leaders, and individuals?			
	Standard: DA Pam 385-90, paragraph 1-4j(13); AR 385-10, paragraph 1-5.			
	Documentation: SOP or policy letters.			

	Aviation safety (continued)	YES	NO	Remarks
14	Are command-approved risk-control options integrated into the SOP as task performance standards and are all appropriate subjects addressed in the unit SOP?			
	Standard: DA Pam 385-90, paragraph 2-12.			
	Documentation: Review the SOP for inclusion of all applicable subjects and risk control options.			
15	Are procedures established to ensure the unit receives applicable aviation/non-aviation safety messages for assigned aircraft, ground vehicles, air vehicles, related systems, components, or repair parts?			
	Standard: AR 750-6, paragraphs 2-3 through 2-7.			
	Documentation: Check for written procedures establishing responsibility for obtaining safety action messages assigned aircraft, air vehicles, related systems, components, or repair parts. If nothing is found, ask the ASO about current procedures.			
16	Does the ASO rehearse, review, and document the adequacy of the unit pre-accident plan?			
	Standard: DA Pam 385-90, paragraph 1-4m(6)(e).			
	Documentation: Review the unit/airfield SOP, pre-accident plan, record of plan preparation, as well as the rehearsal and review records kept on file.			
17	Does the pre-accident plan specify procedures to be followed in the event of aviation and ground accidents?			
	Standard: DA Pam 385-90, paragraph 2-9b(4); FM 3-04.300, paragraph 11-15 and Appendix E-11/ E-12.			
	Documentation: Review the pre-accident plan for procedures to be followed in the event of an accident.			

	Aviation safety (continued)	YES	NO	Remarks
18	Are the responsibilities of aviators involved in accidents established in the SOP?			
	Standard: DA Pam 385-90, paragraph 2-12p.			
	Documentation: Review the SOP to find if this area is covered. If this area is not covered, ask the ASO about current procedures established in the organization.			
19	Are procedures established to integrate risk management into all unit aviation and ground mission planning and execution activities?			
	Standard: AR 385-10, paragraph 15-1b.			
	Documentation: Review the SOP to find if this area is covered. If this area is not recognized ask the ASO about current procedures established in the organization.			
20	Are radiological protection programs established in writing when the commander has determined that a radiological hazard or LASER exist in the unit?			
	Standard: DA Pam 385-90, paragraph 3-6.			
	Documentation: Review the SOP to find if this area is covered. IF THE COMMANDER RECOGNIZES THE NEED FOR SUCH A PROGRAM ask the ASO about current procedures established in the organization.			
21	Has the organization established procedures for handling ammunition, explosives, and/or weapons?			
	Standard: DA Pam 385-90, paragraph 3-10.			
	Documentation: IF THE UNIT PERFORMS THIS FUNCTION, review the SOP to find if this area is covered. If this area is not recognized, ask the ASO about current.			

	Aviation safety (continued)	YES	NO	Remarks
22	Is command level authority of risk acceptance specified in the SOP?			
	Standard: DA Pam 385-90, paragraph 1-4j (6)c.			
	Documentation: Check SOP for risk acceptance level.			
23	Are command safety council meeting conducted quarterly and the minutes maintained on file for 2 years?			
	Standard: DA Pam 385-90, paragraph 1-4j(14) and 2-4f; AR 25-400-2, Army Records Information Management System (ARIMS), https://www.arims.army.mil Record number 385-10d.			
	Documentation: Check records for council minutes.			
24	Are Abbreviated Accident Reports submitted for all applicable aviation and ground mishaps?			
	Standard: DA Pam 385-40.			
	Documentation: Review all submitted reports using Record Management Information System and spot check suspense dates with USACR/SC.			
25	Are file copies maintained of Army Aviation Accident Reports (AAAR) and Army Ground Accident Reports (AGAR) submitted by the organization?			
	Standard: AR 25-400-2, paragraph 1-7.			
	Documentation: Verify file copies are maintained by the army standards.			
26	Does the ASO review aircraft accident reports and operational hazard report (OHR) to help implement corrections?			
	Standard: DA Pam 385-90, paragraphs 1-4m(6)(d); 2-7c.			
	Documentation: Review the accidents and hazard logs to			

	verify the ASO's actions.			
	Aviation safety (continued)	**YES**	**NO**	**Remarks**
27	Is follow-up action documented on operational hazard reports to include the responsible commander's signature and are completed reports maintained on file for 2 years?			
	Standard: DA Pam 385-90, paragraphs 2-7b(f), 2-7c(6).			
	Documentation: Check submitted OHRs. Ensure the suspense's have been met and the commander has signed the completed OHR within 10 working days; files are maintained for 2 years.			
28	Are required aviation accident prevention survey procedures covered in the SOP and all functional areas inspected annually?			
	Standard: AR 385-10, paragraph 15-3; DA Pam 385-90, paragraphs 1-4j and 2-11.			
	Documentation: Check for documentation of annual accident prevention surveys. All applicable functional areas must be surveyed and hazards tracked for the unit to receive credit for a complete survey.			
29	Are copies of previous safety surveys maintained on file for 5 years?			
	Standard: AR 25-400-2, paragraph 1-7; www.arims.army.mil; and 385-10i.			
	Documentation: Review files in the organization indicating the completion of the surveys (5 years worth for all organizations).			

	Aviation safety (continued)	**YES**	**NO**	**Remarks**
30	Are functional or sub areas surveyed within 60 days of a new program manager being appointed?			
	Standard: DA Pam 385-90, paragraph 1-4j(16).			
	Documentation: Review the survey files and compare them to appointment orders. (5 years worth for all organizations).			
31	Does the foreign object damage officer/ NCO delegate specific areas and ensure monthly inspections of all unit areas?			
	Standard: DA Pam 385-90, paragraph 2-8d(2).			
	Documentation: Check the unit's foreign object damage area delegation and survey records.			
32	Are fire risk management surveys reviewed for hazardous conditions to be included in the organizations hazard tracking system?			
	Standard: DA Pam 385-10, paragraph 4-3j; DA Pam 385-90, paragraph 3-9.			
	Documentation: Check Fire Risk Management surveys (AR 420-1, paragraph 25-27) are completed IAW Fire Chief's program, copies maintained by unit, and appropriate hazards added to the hazard log.			
33	Does the ASO monitor unit aviation maintenance programs and address uncorrected hazards on the hazard tracking system?			
	Standard: DA Pam 385-10, paragraph 4-3j; DA Pam 385-90, paragraph 3-9.			
	Documentation: Check to see if the ASO reviews shop inspections/ other reports and puts uncorrected hazards on the hazard log.			

	Aviation safety (continued)	YES	NO	Remarks
34	Does the safety manager monitor the Aviation Life Support Equipment program to ensure all deficiencies that are not corrected by Aviation Life Support Equipment personnel are tracked on the unit's hazard tracking system?			
	Standard: DA Pam 385-90, paragraph 3-11.			
	Documentation: Check surveys and council minutes for Aviation Life Support Equipment evaluations.			
35	Does the ASO review accident/incident reports and investigations, equipment improvement reports (EIRs), product quality deficiency reports (PQDRs), and safety action messages for uncorrected hazards to be included on the units' hazard tracking system?			
	Standard: DA Pam 385-90, paragraph 1-4m(6)(d).			
	Documentation: Review Army Aviation Accident Reports, Army Ground Accident Reports, DA Form 285s, DA Form 4755s, OHRs, product quality deficiency reports, equipment improvement reports, and all other sources that may be good sources of unreported hazards.			
36	Has the organization implemented a file or log of hazards and maintained them for 5 years or until no longer needed?			
	Standard: DA Pam 385-10, paragraph D-4(g); DA Pam 385-90, paragraph 2-10(f); AR 25-400-2; www.arims.army.mil.			
	Documentation: Check organization's files for a hazard tracking system that meets requirements.			
37	Is the hazard identification, analysis, and countermeasures implementation and control program requirements established within the unit SOP?			
	Standard: AR 385-10, paragraph 18-5.			
	Documentation: Review the SOP to find if this area is			

	covered. If this area is not recognized inquire of the ASO.			

	Aviation safety (continued)	**YES**	**NO**	**Remarks**
38	Are all uncorrected hazards detected during accident prevention surveys entered on the hazard tracking system, DA Form 4754 or equivalent? Is a hazard abatement plan completed for RAC 1 & 2 hazards when corrective action exceeds 30 days?			
	Standard: DA Pam 385-10, appendix D, D-4(g); DA Pam 385-90, paragraph 2-10(f) TRADOC Regulation 385-2, paragraph 3-3.			
	Documentation: Check hazards to determine if the uncorrected hazards were entered into the hazard log and an abatement plan was completed on RAC 1 & 2 hazards when correction exceeds 30 days.			
39	Are current hazards (including Aviation Accident Prevention Survey findings) reviewed at the Command Safety Council and are follow-up actions taken to correct noted deficiencies?			
	Standard: DA Pam 385-10, paragraph D-4(g); DA Pam 385-90, paragraphs 2-4a and 2-10(f).			
	Documentation: Check the hazard log and ensure most deficiencies are being logged. Check the suspense system to ensure it is current. Validate review with council minutes.			
40	Are minutes of the Command Safety Council meetings published with action officers and suspense dates assigned to action items?			
	Standard: DA Pam 385-90, paragraph 2-4f.			
	Documentation: Review the council minutes noting the assignment of action, action officers and suspense dates for open items.			

	Aviation safety (continued)	**YES**	**NO**	**Remarks**
41	Are the Command/Enlisted Safety Councils established with appropriate membership and do they meet at least quarterly?			
	Standard: DA Pam 385-90, paragraphs 1-4j(13) and 2-4b.			
	Documentation: Review the orders or SOP and check minutes.			
42	Are safety council meeting minutes signed by the commander and distributed, to include posting to the safety bulletin board and forwarding to the next higher headquarters?			
	Standard: DA Pam 385-90, paragraph 2-4f.			
	Documentation: Check the distribution list on the minutes or cover memo, e-mail forwarding, and the signature block.			
43	Does the safety manager organize the Command Safety Council?			
	Standard: DA Pam 385-90, paragraph 2-4c.			
	Documentation: Review the council orders and or council minutes to ensure that the ASO is functioning as the council's recorder.			

	Aviation safety (continued)	**YES**	**NO**	**Remarks**
44	Are the procedures for the safety councils established in the SOP?			
	Standard: DA Pam 385-90, paragraph 1-4j(6).			
	Documentation: Review the SOP to find if this area is covered. If this area is not recognized, ask the ASO.			
45	Has the commander established a safety education and training program in writing that ensures safety training is conducted monthly for full-time organizations and quarterly for all others?			
	Standard: AR 385-10, paragraph 15-5; DA Pam 385-90, paragraphs 2-4g and 2-12.			
	Documentation: AR 385-10, paragraph 15-5; DA Pam 385-90, paragraph 2-4g.			

B-12. Motor vehicle accident prevention

a. Most motor vehicle accidents are caused by driver error. Proper selection, training, and supervision can reduce the incidence of these errors. Commanders are ultimately responsible for the implementation of effective motor accident prevention efforts within their commands and should ensure the individuals they select as drivers are well trained, motivated, and supervised. This includes responsibility for operation of POVs by members of their commands. See table B-12 for a motor vehicle accident prevention safety checklist.

b. Commanders should:

(1) Comply with requirements of 23 CFR 1230, DODI 6055.04, AR 385-10, and AR 600-55.

(2) Develop and prescribe local procedures for the safe operation of motor vehicles.

(3) Develop and execute training, education, and motivation programs for motor vehicle operation.

(4) Ensure motor vehicle activities and accident data are collected and analyzed.

Table B-12 Motor vehicle accident prevention

		YES	NO	Remarks
1	Does commander/commandant administer a Motor Vehicle Accident Prevention program?			
	Standard: AR 385-10, paragraph 11-2(a)(3).			
	Documentation: Motor Vehicle Accident Prevention document (i.e., safety regulation, standard memo, etc…).			
2	Does the commander/commandant ensure supervisors are enforcing standards of performance for vehicle operations of Army motor vehicle operations and periodically assessing driver performance?			
	Standard: AR 385-10, paragraphs1-5b and 11-2b.			
	Documentation: Inspection report, training records, and SOPs.			

	Motor vehicle accident prevention (continued)	**YES**	**NO**	**Remarks**
3	Are civilian employees that operate Army motor vehicle receiving online Army Accident Avoidance Training Course?			
	Standard: AR 385-10, paragraph 11-7(a)(5).			
	Documentation: Certificates of completion.			
4	Have commanders established procedures for the safe operation of motor vehicles on and off Army installations and contractor vehicles on post?			
	Standard: AR 385-10 paragraph 11-3a(1)(2).			
	Documentation: Motor Vehicle Accident Prevention document, SOP, and regulation.			
5	Do commanders ensure that motorcycle and moped operators are required to comply with established Army motorcycle safety requirements?			
	Standard: AR 385-10, paragraph 11-9.			
	Documentation: Motor vehicle accident prevention program, appropriate license and personal protective equipment.			
6	Has the commander/commandant established a Motorcycle Mentorship Program?			
	Standard: TRADOC Regulation 385-2, paragraph 1-4e(7).			
	Documentation: Motor Vehicle Accident Prevention document.			

	Motor vehicle accident prevention (continued)	YES	NO	Remarks
7	Is the Army Traffic Safety Training Program fully implemented (Introductory (Advance Individual Training Students complete one hour DVD), Local Area Hazards, Intermediate, Accident Avoidance, and Remedial Driver Training)?			
	Standard: AR 385-10, paragraph 11-7a.(1)(2)(3)(5) and b.			
	Documentation: Attendance roster and lesson plans.			
8	Does the commander convene a POV task force at least semiannually?			
	Standard: TRADOC Regulation 385-2, paragraph 8-11a.			
	Documentation: Minutes from POV task force.			
9	Are motorcycle operators prior to operation of any motorcycle completing a Motorcycle Safety Foundation or Motorcycle Safety Foundation based approved motorcycle rider safety course?			
	Standard: AR 385-10, paragraph 11-9b(1).			
	Documentation: Certificate of completion, lesson plans, and attendance roster.			
10	Do all operators of government or privately owned all terrain vehicles on DOD installations meet established training requirements?			
	Standard: DoDI 6055.4, paragraph E3.2.3.3; AR 385-10, paragraph 11-9b(6); TRADOC Regulation 385-2, paragraph 8-5.			
	Documentation: Attendance rosters, certificates of completion, and lesson plans.			

	Motor vehicle accident prevention (continued)	**YES**	**NO**	**Remarks**
11	Are all TRADOC military members prohibited from using cell phones unless hands free regardless of location?			
	Standard: TRADOC Regulation 385-2, paragraph 8-10.			
	Documentation: Motor Vehicle Accident Prevention Regulation, SOP, and policy.			
12	Has the command implemented a straggler control policy?			
	Standard: TRADOC Regulation 385-2, paragraph 8-8a.			
	Documentation: Regulation, SOP, and policy.			
13	Do all DOD vehicles, including government-owned and contractor-operated vehicles required to pass an annual safety inspection?			
	Standard: AR 385-10 paragraph 11-3c.			
	Documentation: Safety inspections.			
14	Do soldiers complete a TRiPs (POV risk assessment) when going on leave, pass or TDY out of the immediate local area and will be operating a motor vehicle?			
	Standard: AR 385-10 paragraph 11.4a(8).			
	Documentation: Actual TRiPS reports.			
15	Does command have the appropriate traffic safety clothing for traffic guards and Soldiers?			
	Standard: TRADOC Regulation 385-2, paragraph 8-9, table 8-1.			
	Documentation: Regulation, SOP, and policy.			

Table B-13 Identification of Radiation, Inert Munitions and Ammunition Components, Museums/Displays:

1. General: War trophies, museum display items, training aids, and the use of inert ammunition and components for public demonstrations, or office display may represent a significant hazard if these items are not free of all explosive material or chemical fillers.

2. Policy:

a. Ammunition and explosive items will not be rendered inert except by technically qualified personnel IAW established procedures.

b. Ammunition and ammunition components will be identified and certified as inert IAW DA Pam 385-64.

c. Items on museum display must be certified as inert and that certification annotated on the DA Form 2609, Historical Property Catalog, or its electronic equivalent, for that item.

	Identification of Radiation, Inert Munitions and Ammunition Components, Museums/Displays	**YES**	**NO**	**Remarks**
1	Is each item of ammunition or component that is part of a permanent museum display inspected by explosive ordnance disposal personnel or other personnel familiar with explosives?			
	Standard: DA Pam 385-64, Para 3-5d			
	Documentation: DA Form 2609 or its electronic equivalent, for item annotated as inert.			
2	Does the DA From 2609 or its electronic equivalent record the date of inspection and inspecting unit?			
	Standard: DA Pam 385-64, Para 3-5d			
	Documentation: DA Form 2609 or its electronic equivalent, for item annotated			

	Identification of Radiation, Inert Munitions and Ammunition Components, Museums/Displays	**YES**	**NO**	**Remarks**
3	Has the museum curator annotated in the remarks section of the DA Form 2609 that the item was found to be or made inert?			
	Standard: DA Pam 385-64, Para 3-5d			
	Documentation: DA Form 2609 or its electronic equivalent, for item annotated			
4	Has the museum established a Hazard Communication Program?			
	Standard: AR 870-20 paragraph 1-15c			
	Documentation: Copy of written Hazard Communication Program.			
5	Are museum employees trained IAW 29CFR1200?			
	Standard: AR 870-20,, paragraph 1-16c(6)			
	Documentation: Documented training for employees.			
6	Are items in the museum's collection containing radioactive material licensed with the NRC or controlled with an internal Army permit?			
	Standard: AR 870-20, paragraph 1-16d			
	Documentation: Copy of NRC License or Army Radiation Authorization.			
7	Have radiological surveys of artifacts containing radiation or areas in which they are stored conducted per the conditions of the license or permit?			
	Standard: AR 870-20, paragraph 1-16d			
	Documentation: Copy of radiological survey.			

Appendix C
Conditioning/Obstacle Course Criteria

C-1. Conditioning/obstacle course criteria
Conditioning/endurance course inspection and standardization criteria (see figures C-1 through C-31 and tables C-1 through C-26).

IMT Conditioning/Endurance Course Evaluator Information Checklist

Course: _____

Location: _____ Date of Inspection: _____

Inspector:
Name: _____Organization: _____

POC Name: _____Organization:_____

Phone: _____

1. Courses will be evaluated to identify any safety hazards/concerns. Deficiencies found during the inspection will be annotated and corrective actions initiated by the responsible organization.

2. This evaluation will also assist in standardizing courses used at TRADOC activities.

3. Obstacle Category: Conditioning and Endurance.

Note: Surface refers to the area beneath and around obstacles to include travel lanes and at least six feet to the sides of obstacles presenting a fall hazard. Impact absorbing material depth under obstacles is 18 inches for sand, 12 inches of shredded rubber, and 24 inches for saw dust. Sand and sawdust must be tilled or turned at least annually to combat settling and ensure impact absorbance.

4. Standards for conditioning/endurance courses are a combination of those found in Engineer Drawing DEF 028-13-95, Obstacle Course Layout Plan; TC 3-22.20, Army Physical Readiness Training; and TRADOC Regulation 350-6.

Figure C-1. IMT conditioning/endurance course evaluator information checklist

Table C-1
General administrative inspection criteria checklist

	AREA	STANDARD	NO	NO GO
1.	Training requirement	a. Training event is supported by TSP, program of instruction, or lesson plan.		
		b. SOPs are published and on hand at each course.		
2.	Administrative	Condition service logs are maintained on all ropes used for surmounting and suspension.		
3.	Risk management	a. Generic risk assessment worksheet maintained onsite.		
		b. Daily risk assessment worksheet is onsite during training identifying hazards associated with personnel, equipment, and environment.		
4.	Inspections	a. Copy of last safety inspection report conducted by professional safety staff onsite.		
		b. Copy of daily pre-operations inspection maintained at site.		
		c. Existing deficiencies are documented and maintained by the responsible organization.		
		d. Copy of current work orders maintained by responsible organization.		
5.	Accident trends	A list of all injuries sustained on obstacles is maintained by responsible organization and safety office.		
	Remarks:			

Table C-2
General inspection criteria checklist

	AREA	STANDARD	GO	NO GO
1.	Wood timbers	a. There are no signs of rot, warping, severe weathering, or impact damage.		
		b. No protruding nails or splinters that may cause injury when obstacle is negotiated.		
		c. All timbers are connected securely together to prevent movement when put under stress.		
2.	Wall boards	a. All boards are securely attached to structure with proper hardware (bolts and nuts).		
		b. All boards free of protruding nails, splinters, rot, or damage.		
		c. Edges of boards rounded/smooth where used to support individual's weight.		
3.	Hardware	a. All bolts, nuts, and washers in place and of the designated type, size, and placement.		
		b. All anchors are made of three or more galvanized guy wire.		
		c. Take-up galvanized turnbuckles are used at anchor points of each cable to allow adjustment.		
		d. All cable clamps are positioned with U-bolt placed on the dead or short end of cable.		
4.	Fiber ropes	a. All ropes are free of rips, tears, cuts, frays, rot, or unraveled sections.		
		b. All ropes designed for surmounting are 1.5 inches in diameter.		
		c. Ropes are securely mounted to supporting timbers with ends tied and taped.		
		d. Ends of ropes are tied in a knot or wrapped to prevent fraying.		
		e. Condition/service logs are maintained on all ropes used for surmounting and suspension.		
5.	Design	Professional safety staff reviews obstacle construction plans.		

	Remarks:

	AREA	STANDARD	GO	NO GO
6.	Fall protection	a. The surface under conditioning obstacles will be free of any tripping hazard and covered with sand or saw dust.		
		b. Any obstacle requiring negotiation at an elevated level (in excess of 6 feet) will have impact absorbing material beneath it and around it at least 5 feet from the edges.		
		c. Forged steel hooks are used to fasten nets to its supports.		
		d. Nets are weight tested after initial installation and before being used as a fall protection system, whenever relocated, after major repair and every 6 months. The drop-test shall consist of a 400 pound (180 kg) bag of sand 30 or - 2 inches (76 + or - 5 cm) in diameter dropped into the net from the highest walking/working surface at which employees are exposed to fall hazards, but not from less than 42 inches (1.1 m) above that level. When the commander can demonstrate that it is unreasonable to perform the drop-test required by 29 CFR 1926.502 (c)(4)(i), the commander (or a designated competent person) shall certify that the net and net installation is in compliance with 29 CFR 1926.502(c)(4)(i) by preparing a certification record prior to the net being used as a fall protection system. The certification record must include an identification of the net and net installation for which the certification record is being prepared; the date that it was determined that the identified net and net installation were in compliance with 29 CFR 1926.502 (c)(3) and the signature of the person making the determination and certification. The most recent certification record for each net and net installation shall be available at the training site for inspection.		
		e. All nets are suspended below high obstacles (in excess of 10 feet) have padding or small mesh material to prevent limbs from penetrating net		
		f. All padding is in good condition with no tears, holes, or loose material to trip personnel when dismounting.		
		g. All pole-vaulting pads are placed properly at base of designated high obstacles.		
7.	Padding	a. All safety padding attached to timbers is in good condition without signs of damage.		
		b. All pads are securely attached to the timber supports to prevent movement when impacted.		
8.	Base containmen t box	a. Base containment box is adequate to contain all absorbent material located at base of obstacle.		
		b. Containment box does not display signs of rot, damage, or instability.		
		c. Containment box extends far enough from dismount point of obstacle to prevent creating a tripping hazard.		
		d. Containment box is filled with either 18 inches of sand, 12 inches of shredded rubber, or 24 inches of sawdust.		
9.	Surfaces	All surfaces beneath low obstacles are free of hazards that have the potential to cause injury when crawled upon.		
10.	Condition	a. Designated course is free of tripping hazards.		
		b. Course surface is well maintained to prevent injury in case of falls.		
		c. Course surface is raked and policed prior to each use.		
		d. Course surface is free of large rocks, stones, or concrete materials that may cause injury in the event of a fall.		
11.	Safety	Safety Office staff conducts semi-annual inspections.		

	Remarks:

Table C-2
General inspection criteria checklist, continued
C-2. Obstacle specific design criteria
The following criteria supplement sketches found in TC 3-22.20, and DA Corps of Engineer Drawing DEF 028-13-95, Obstacle Course Layout Plan.

a. Climbing ropes that are 1 1/2 inches wide and either straight or knotted.

b. Walls 7 or 8 feet high.

c. Ground covering should be maintained to prevent excessive erosion and compaction.

d. This criteria applies to the following specific obstacle courses:

(1) Obstacles for jumping (see figure C-2).

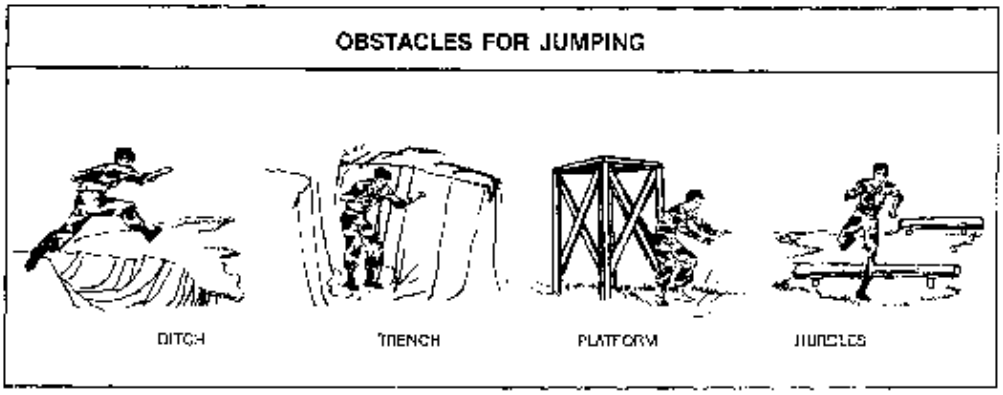

Figure C-2. Obstacles for jumping

(2) Obstacles for dodging (see figure C-3).

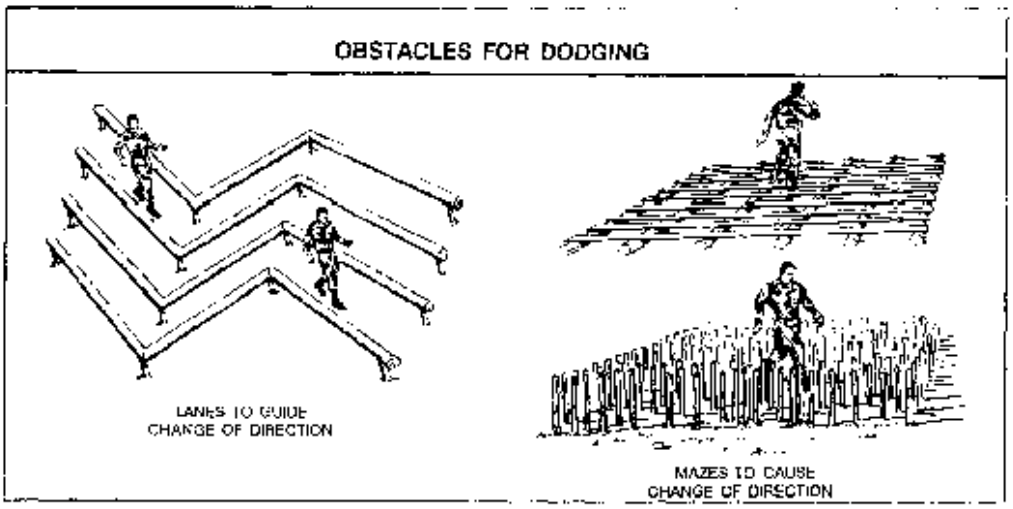

Figure C-3. Obstacles for dodging

(3) Obstacles for climbing and surmounting (see figure C-4).

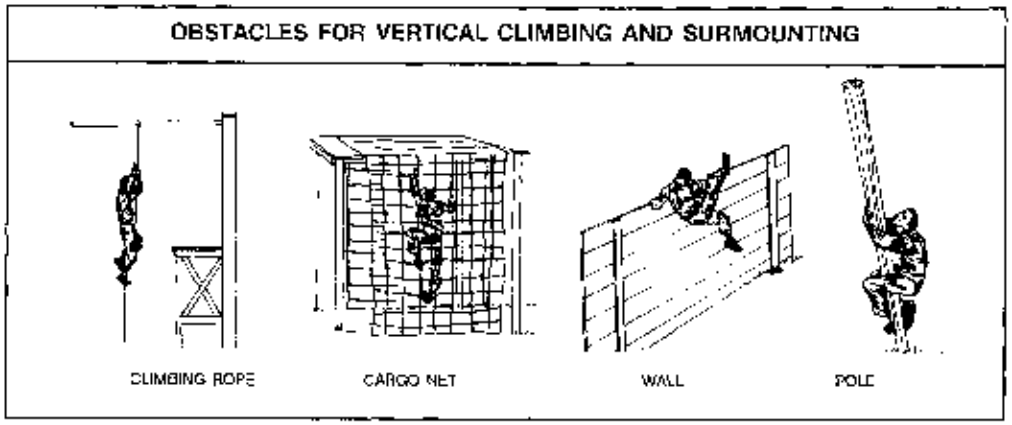

Figure C-4. Obstacles for vertical climbing and surmounting

(4) Horizontal traversing (see figure C-5).

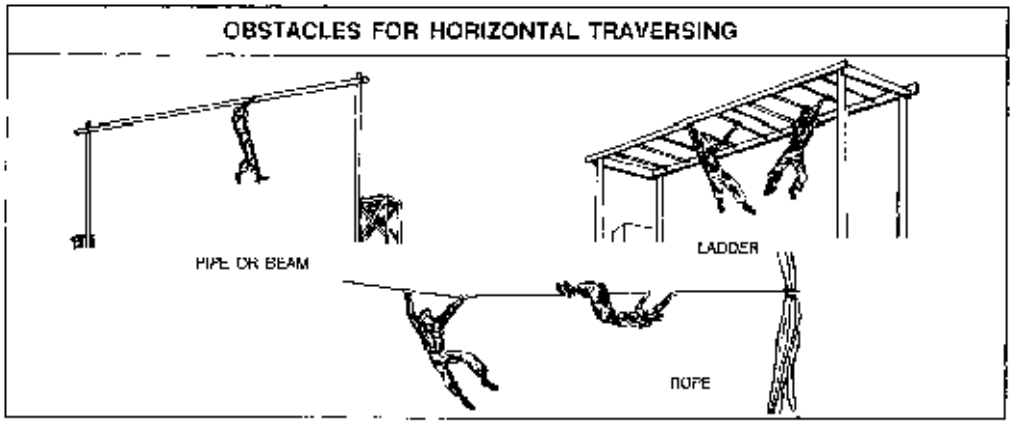

Figure C-5. Obstacles for horizontal traversing

(5) Obstacles for crawling (see figure C-6).

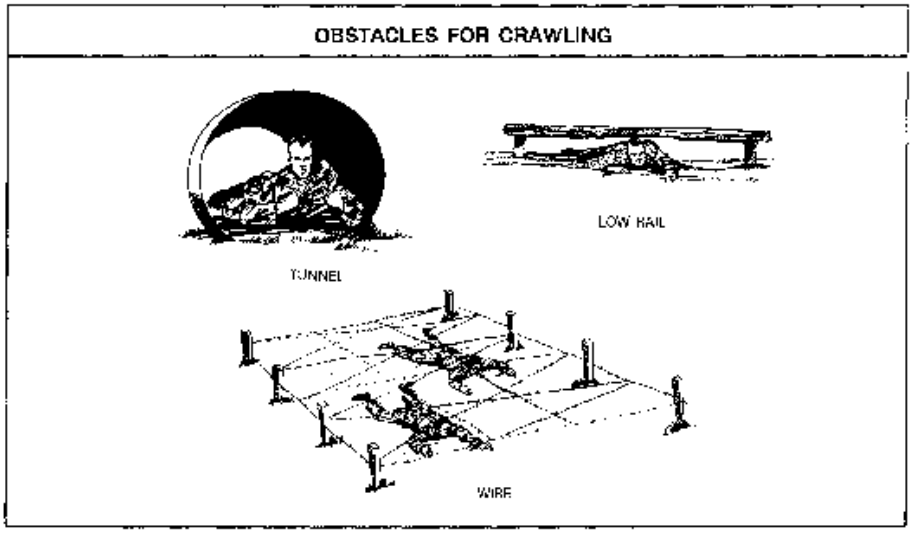

Figure C-6. Obstacles for crawling

(6) Obstacles for vaulting (see figure C-7).

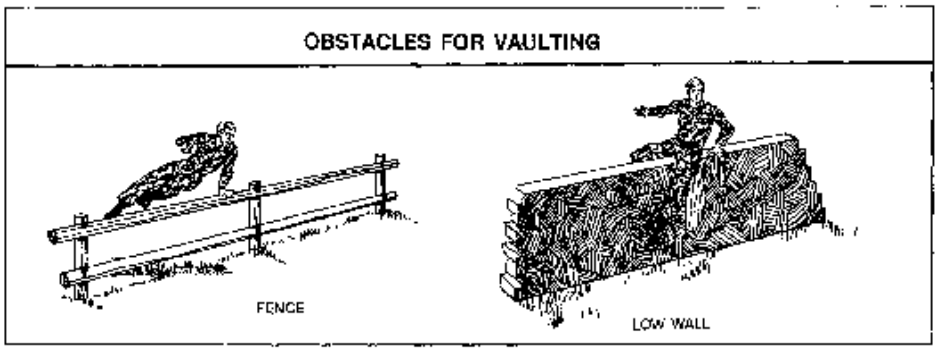

Figure C-7. Obstacle for vaulting

(7) Obstacles for balancing (see figure C-8).

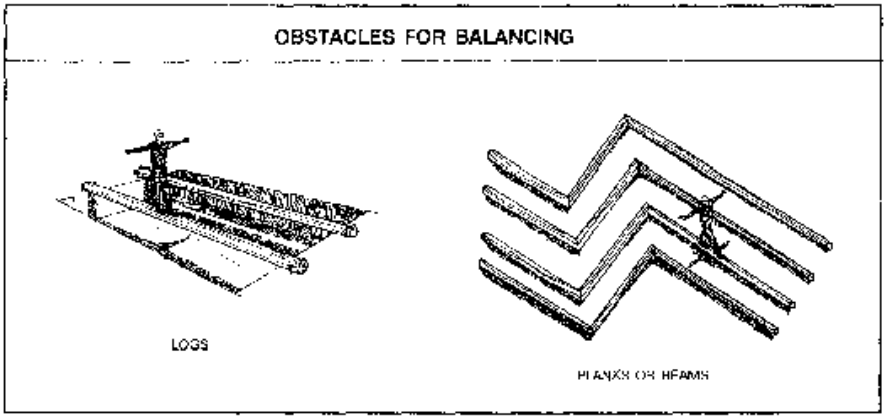

Figure C-8. Obstacle for balancing

C-3. IMT obstacle course checklist

Figure C-9 provides an obstacle course inspection and standardization criteria.

a. See table C-3 for the IMT obstacle course administrative general inspection criteria.
b. See table C-4 for the IMT obstacle course general inspection criteria.

IMT Obstacle Course Evaluator Information

Obstacle Course: _____

Location: _____ Date of Inspection: _____

Inspector:
Name: _____ Organization: _____

POC:
Name: _____ Organization:_____

Phone: _____

1. Courses will be evaluated to identify any safety hazards/concerns. Deficiencies found during the inspection will be annotated and corrective actions initiated by the responsible organization.

2. This evaluation will also assist in standardizing courses used at TRADOC activities.

3. Obstacle categories: standard, nonstandard, and other.

Note: Where indicated on checklist, "fall protection" refers to devices or systems emplaced beneath obstacles and at least six feet to the sides of obstacles presenting a fall hazard, to prevent injury during falls; "fall arrest systems" are devices attached to personnel to limit the distance of falls; and "surface" refers to the area beneath and around obstacles, to include travel lanes. Impact absorbing material depth under obstacles is 18 inches for sand, 12 inches of shredded rubber, and 24 inches for saw dust. Sand and sawdust must be tilled or turned at least annually to combat settling and ensure impact absorbance.

4. Standards for Conditioning/Endurance Courses are a combination of those found in TC 3-22.20; Engineer Drawing DEF 028-13-95, Obstacle Course Layout Plan; and TRADOC Regulation 350-6.

Figure C-9. IMT obstacle course evaluator information

Table C-3
IMT obstacle course administrative general inspection criteria

	AREA	STANDARD	GO	NO GO
1	Training requirement	a. Training event is supported by TSP, program of instruction, or lesson plan.		
		b. SOPs are published and on hand at each course.		
2	Administrative	a. All ropes used for surmounting and suspension have condition service logs available.		
		b. Weight testing logs are maintained for nets.		
3	CRM	a. Generic risk assessment is completed and maintained on training site.		
		b. Daily risk assessment is completed and onsite during training, identifying hazards associated with personnel, equipment, and environment.		
4	Inspections	a. Copy of last professional safety staff's safety inspection report is onsite.		
		b. Copy of daily inspection is maintained at training site.		
		c. A list of all current deficiencies is maintained by the responsible organization.		
		d. Copies of current work orders are maintained by the responsible organization.		
5	Accident trends	A list of all injuries sustained on obstacles is maintained by the responsible organization and safety office.		
	Remarks:			

Table C-4
IMT obstacle course general inspection criteria

	AREA	STANDARD	GO	NO GO
1	Wood timbers	a. There are no signs of rot, warping, severe weathering, or impact damage.		
		b. There are no protruding nails or splinters to cause injury when obstacle is negotiated.		
		c. All timbers are securely connected together without excess separation between joints.		
2	Wall boards	a. All boards are securely attached to structure with proper hardware.		
		b. All boards free of protruding nails, splinters, rot, or damage.		
		c. Edges of boards rounded/smooth where used to support individual's weight.		
3	Hardware	a. All bolts, nuts, and washers are in place and of the designated type/size/placement.		
		b. All anchors are made of 3-strand galvanized guy wire or larger.		
		c. Take-up galvanized turnbuckles are used at anchor points of each cable to allow for adjustment.		
		d. Anchor cables are not used to support obstacles not properly constructed or improperly emplaced in the ground.		
		e. All cable clamps are positioned with U-bolt placed on the dead or short end of cable.		
4	Fiber ropes	a. All ropes are free of rips, tears, cuts, frays, rot, or unraveled sections due to age, excessive wear, or contact with the ground.		
		b. All ropes designed for surmounting are 1.5 inches in diameter.		
		c. Ropes are securely mounted to supporting timbers with ends tied/taped.		
		d. Ends of ropes are tied in a knot or wrapped to prevent fraying.		
		e. Condition/service logs are maintained on all ropes used for surmounting and suspension.		
5	Design	Obstacle adheres to blue print specifications.		
	Remarks:			

Table C-4
IMT obstacle course general inspection criteria, continued

	AREA	STANDARD	GO	NO GO
6	Fall protection	a. All nets meet American National Standards Institute (ANSI) load bearing standard for personnel (ANSI 10.11/OSHA 1926.105) 3.5-inch nylon mesh, 17,500 lb impact resistant.		
		b. All nets designed for fall protection extend 8 feet out from point of potential fall.		
		c. Forged steel hooks are used to fasten nets to its supports.		
		d. Nets are weight tested after initial installation and before being used as a fall protection system, whenever relocated, after major repair and every 6 months. The drop-test shall consist of 400 pound (180 kg) bag of sand 30 + or - 2 inches (76 + or - 5 cm) in diameter dropped into the net from the highest walking/working surface at which employees are exposed to fall hazards, but not from less than 42 inches (1.1 m) above that level. When the commander can demonstrate that it is unreasonable to perform the drop-test required by 29 CFR 1926.502 (c)(4)(i), the commander (or a designated competent person) shall certify that the net and net installation is in compliance with 29 CFR 1926.502(c)(4)(i) by preparing a certification record prior to the net being used as a fall protection system. The certification record must include an identification of the net and net installation for which the certification record is being prepared; the date that it was determined that the identified net and net installation were in compliance with 29 CFR 1926.502 (c)(3) and the signature of the person making the determination and certification. The most recent certification record for each net and net installation shall be available at the training site for inspection.		
		e. All nets are suspended below high obstacles (in excess of 10 feet) have padding or small mesh material to prevent limbs from penetrating net.		
		f. Pole-vaulting pads are in good condition with no tears, holes, or loose material, which can trip personnel when dismounting.		
		g. All pole-vaulting pads are placed properly at base of designated high obstacles.		
7	Padding on timbers	a. All padding on timbers is in good condition without signs of damage.		
		b. Pads are securely attached to the timber supports to prevent movement when impacted.		
8	Base contain-ment box	a. Base containment box is adequate for containment of absorbent material located at base of obstacle.		
		b. Containment box does not display signs of rot, damage, or instability.		
		c. Containment box is large enough to dismount from obstacle without causing injury.		
		d. Containment box is filled with either 18 inches of sand, 12 inches of shredded rubber, or 24 inches of sawdust.		
9	Surfaces	All surfaces beneath low obstacles are free of hazards with the potential to cause injury.		
10	Course condition	a. Designated course is free of tripping hazards.		
		b. Course surface is well maintained to prevent injury in case of falls.		
		c. Course surface is raked and policed prior to each use.		
		d. Course surface is free of large rocks, stones, or concrete materials that may cause injury in the case of a fall.		
11	Safety	Professional safety staff reviews obstacle construction plans and conducts semiannual inspections.		

	Remarks:			

C-4. Obstacle course specific inspection criteria

a. The accompanying checklists and sketches supplement TC 3-22.20 and DA Corps of Engineer Drawings DEF 028-13-95, Obstacle Course Layout Plan, and TRADOC Regulation 350-6. They serve as minimum construction/safety standards for obstacle courses used by IMT facilities.

b. The “jump and land” and “swinger” are not included and will not be used. These obstacles are conducive to lower extremity injuries.

c. Safety equipment (nets, pads, ground covering) should be procured from reliable sources, inspected and tested frequently, and replaced before deterioration/failure.

d. Tables and figures are provided for specific courses.

(1) See table C-5 and figure C-10 for “the tough one.”

Table C-5
The tough one checklist

	AREA	STANDARD	GO	NO GO
1	Wood timbers	a. There are no signs of rot, warping, severe weathering, or impact damage.		
		b. All timbers meet specified dimensions as stated in engineer drawings and TRADOC Regulation 350-6.		
		c. There are no protruding nails or splinters that may cause injury when obstacle is negotiated.		
		d. All timbers are connected securely together without excess separation between joints.		
2	Hardware	All bolts, nuts, and washers are in place and of the designated type, size, and placement.		
3	Design	Professional safety staff reviews obstacle construction plans.		
4	Fall protection	a. All nets meet ANSI load bearing standard for personnel (ANSI 10.11/OSHA 1926.105) 3.5-inch nylon mesh, 17,500 lb impact resistant.		
		b. All nets designed for fall protection extend 8 feet out from point of potential fall.		
		c. Forged steel hooks are used to fasten net to its supports.		
		d. Nets are weight tested after initial installation and before being used as a fall protection system, whenever relocated, after major repair and every 6 months. The drop-test shall consist of 400 pound (180 kg) bag of sand 30 + or - 2 inches (76 + or - 5 cm) in diameter dropped into the net from the highest walking/working surface at which employees are exposed to fall hazards, but not from less than 42 inches (1.1 m) above that level. When the commander can demonstrate that it is unreasonable to perform the drop-test required by 29 CFR 1926.502 (c)(4)(i), the commander (or a designated competent person) shall certify that the net and net installation is in compliance with 29 CFR 1926.502(c)(4)(i) by preparing a certification record prior to the net being used as a fall protection system. The certification record must include an identification of the net and net installation for which the certification record is being prepared; the date that it was determined that the identified net and net installation were in compliance with 29 CFR 1926.502 (c)(3) and the signature of the person making the determination and certification. The most recent certification record for each net and net installation shall be available at the training site for inspection.		
		e. Pole-vaulting pads are in good condition with no tears, holes, or loose material, which can trip personnel when dismounting.		
		f. Pole-vaulting pads are placed properly at base of designated obstacles.		
5	Base containment box	a. Base containment box is adequate for containment of absorbent material located at base of obstacle.		
		b. Containment box does not display signs of rot, damage, or instability.		
		c. Containment box is large enough to dismount from obstacle without causing injury.		
Remarks:				

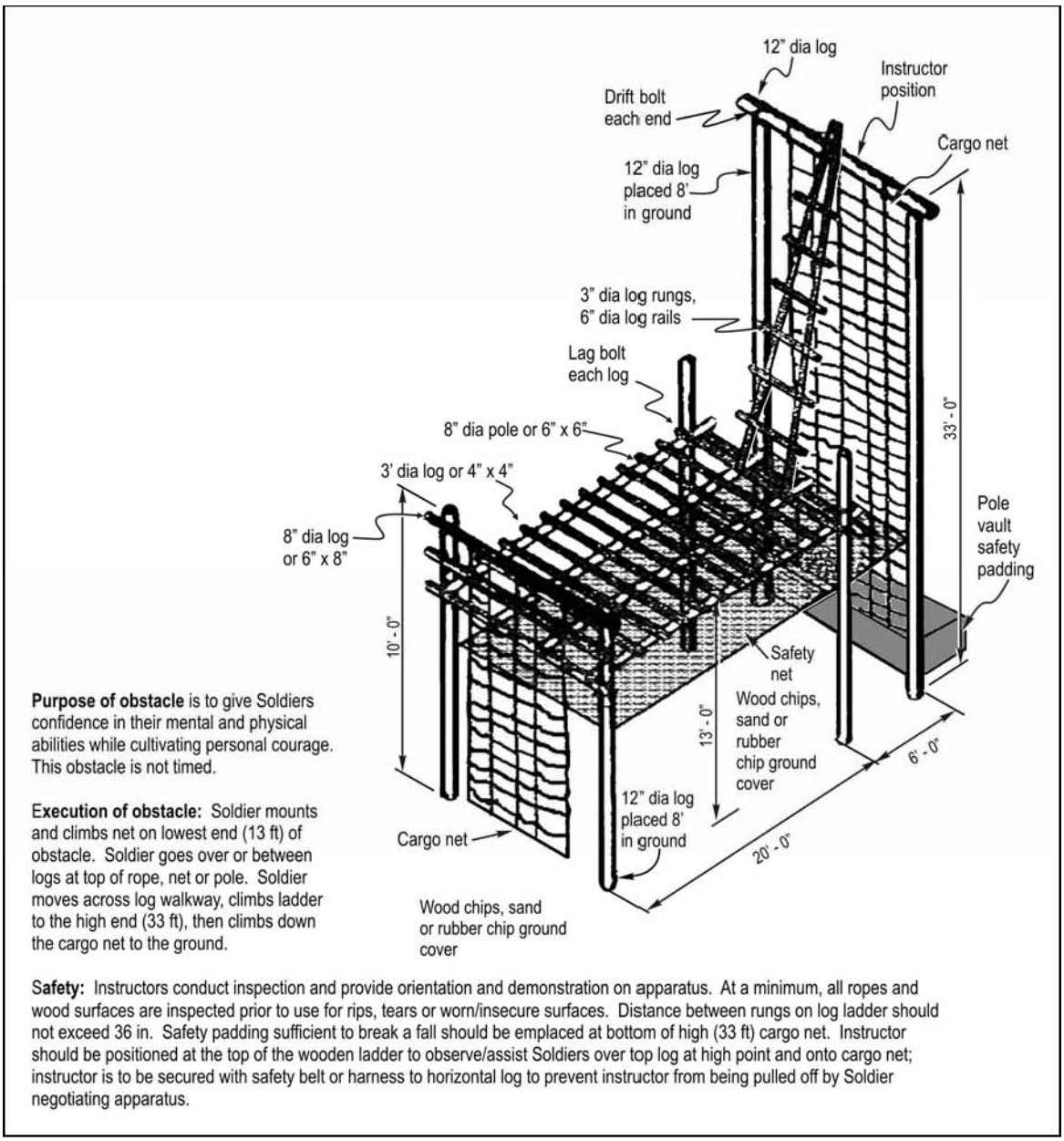

Figure C-10. The tough one

(2) See table C-6 and figure C-11 for the "inverted rope descent/the slide for life."

Table C-6
Inverted rope descent/the slide for life

	AREA	STANDARD	GO	NO GO
1	Wood Timbers	a. There are no signs of rot, warping, severe weathering, or impact damage.		
		b. All timbers meet specified dimensions as stated in engineer drawings and TRADOC Regulation 350-6.		
		c. There are no protruding nails or splinters that may cause injury when obstacle is negotiated.		
		d. All timbers are connected securely together without excess separation between joints.		
2	Hardware	a. All bolts, nuts, and washers are in place and of the designated type and size.		
		b. All anchors are made of 3-strand galvanized guy wire or larger.		
		c. Take-up galvanized turnbuckles are used at anchor points of each cable to allow for adjustment.		
		d. Anchor cables are not used to support obstacles not properly constructed or improperly emplaced in the ground.		
		e. All cable clamps are positioned with U-bolt placed on the dead or short end of cable.		
3	Fiber ropes	a. All ropes are free of rips, tears, cuts, frays, rot, or unraveled sections due to age, excessive wear, or contact with the ground.		
		b. All ropes designed for surmounting are 1.5 inches in diameter.		
		c. Ropes are securely mounted to supporting timbers with ends tied and taped.		
4	Design	Professional safety staff reviews obstacle construction plans.		

Table C-6
Inverted rope descent/the slide for life, continued

	AREA	STANDARD	YES	NO
5	Fall protection	a. All nets meet ANSI load bearing standard for personnel (ANSI 10.11/OSHA 1926.105) 3.5-inch nylon mesh, 17,500 lb impact resistant.		
		b. All nets designed for fall protection extend 8 feet out from edge of obstacle.		
		c. Forged steel hooks are used to fasten net to its supports.		
		d. Nets are weight tested after initial installation and before being used as a fall protection system, whenever relocated, after major repair and every 6 months. The drop-test shall consist of 400 pound (180 kg) bag of sand 30 + or - 2 inches (76 + or - 5 cm) in diameter dropped into the net from the highest walking/working surface at which employees are exposed to fall hazards, but not from less than 42 inches (1.1 m) above that level. When the commander can demonstrate that it is unreasonable to perform the drop-test required by 29 CFR 1926.502 (c)(4)(i), the commander (or a designated competent person) shall certify that the net and net installation is in compliance with 29 CFR 1926.502(c)(4)(i) by preparing a certification record prior to the net being used as a fall protection system. The certification record must include an identification of the net and net installation for which the certification record is being prepared; the date that it was determined that the identified net and net installation were in compliance with 29 CFR 1926.502 (c)(3) and the signature of the person making the determination and certification. The most recent certification record for each net and net installation shall be available at the training site for inspection.		
		e. All nets suspended below high obstacles (excess of 10 feet) have padding or small mesh material to prevent limbs from penetrating mesh.		
		f. Pole-vaulting pads are in good condition with no tears, holes, or loose material, which can trip personnel when dismounting.		
		g. Pole-vaulting pads are properly placed at base of designated obstacles.		
6	Base contain-ment box	a. Base containment box is adequate for containment of absorbent material located at base of obstacle.		
		b. Containment box does not display signs of rot, damage, or instability.		
		c. Containment box is large enough to dismount from obstacle without causing injury.		
	Remarks:			

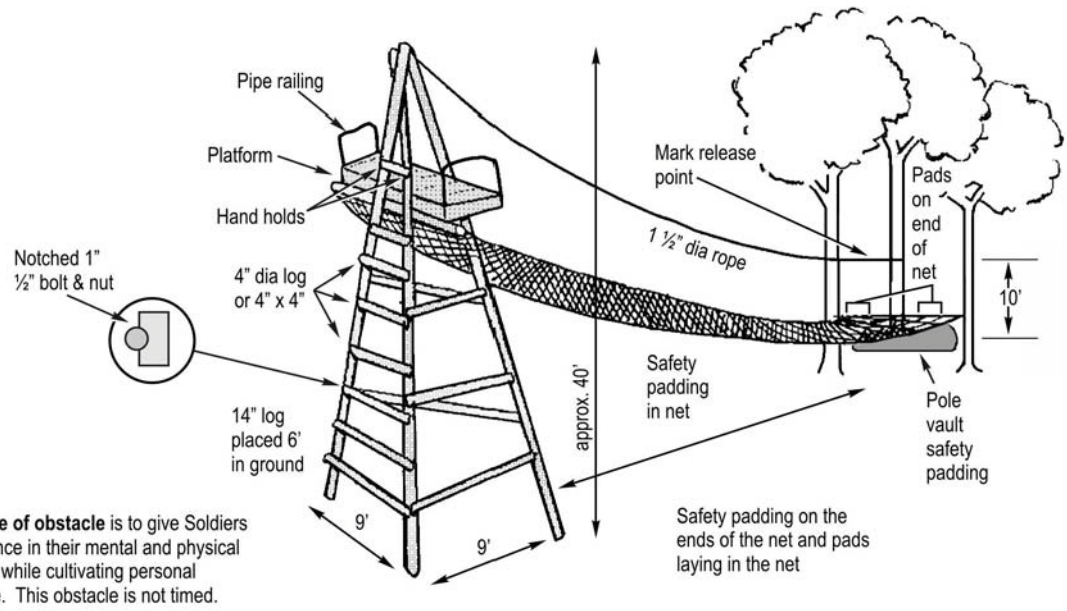

Purpose of obstacle is to give Soldiers confidence in their mental and physical abilities while cultivating personal courage. This obstacle is not timed.

Execution of obstacle: Soldier climbs tower, mounts center of platform (instructor available to assist), grasps rope firmly and swing legs upward. Soldier holds rope with legs to distribute weight between legs and arms. Braking the slide with feet and legs, Soldier proceeds down the rope. Soldiers must be warned that they could get rope burns on their hands if improperly executed. This obstacle can be dangerous when the rope is slippery. Soldiers leave the rope at a clearly marked point of release. Only one Soldier at a time is allowed on the rope.

This obstacle requires two instructors – one on the platform and the other on the ground.

Safety: Instructors conduct inspection and provide orientation and demonstration on apparatus. At a minimum, all ropes, nets and wood surfaces are inspected prior to use for rips, tears or worn/unsecured surfaces. Spacing between the rungs on the log ladder should not exceed 36 inches. Rope will be 1.5 inch diameter with no knots in the vicinity of the mounting point. A safety net is attached so that a Soldier falling from any portion of the rope will land in the net before striking any part of the tower. Padding placed in the net will reduce likelihood of hands/fingers being twisted in the net. Safety padding sufficient to break a fall should be emplaced at the drop off point. Instructor is positioned on the tower platform to assist Soldiers mounting the rope; instructor is to be secured to tower to prevent instructor from being pulled off by Soldier negotiating apparatus. Padding is emplaced at the bottom end of the net (nearest release point) to prevent Soldier from injury on tightened portion of net. This obstacle is dangerous when rope becomes wet/slippery and should not be used. Gloves should not be worn on this apparatus.

Figure C-11. Inverted rope descent/the slide for life

(3) See table C-7 and figure C-12 for the "confidence climb."

Table C-7
Confidence climb checklist

	AREA	STANDARD	GO	NO GO
1	Wood timbers	a. There are no signs of rot, warping, severe weathering, or impact damage.		
		b. All timbers meet specified dimensions as stated in engineer drawings and TRADOC Regulation 350-6.		
		c. There are no protruding nails or splinters that may cause injury when obstacle is negotiated.		
		d. All timbers are securely connected together without excess separation between joints.		
2	Hardware	a. All bolts, nuts, and washers are in place and of the designated type and size.		
		b. All anchors are made of 3-strand galvanized guy wire or larger.		
		c. Take-up galvanized turnbuckles are used at anchor points of each cable to allow for adjustment.		
		d. Anchor cables are not used to support obstacles not properly constructed or improperly emplaced in the ground.		
		e. All cable clamps are positioned with U-bolt placed on the dead or short end of cable.		
3	Design	Professional safety staff reviews obstacle construction plans.		
4	Fall protection	a. Pole-vaulting pads are in good condition with no tears, holes, or loose material, which can trip personnel when dismounting.		
		b. All pole-vaulting pads are properly placed at base of designated obstacles.		
5	Base contain-ment box	a. Base containment box is adequate for containment of absorbent material located at base of obstacle.		
		b. Containment box does not display signs of rot, damage, or instability.		
		c. Containment box is large enough to dismount from obstacle without causing injury.		
Remarks:				

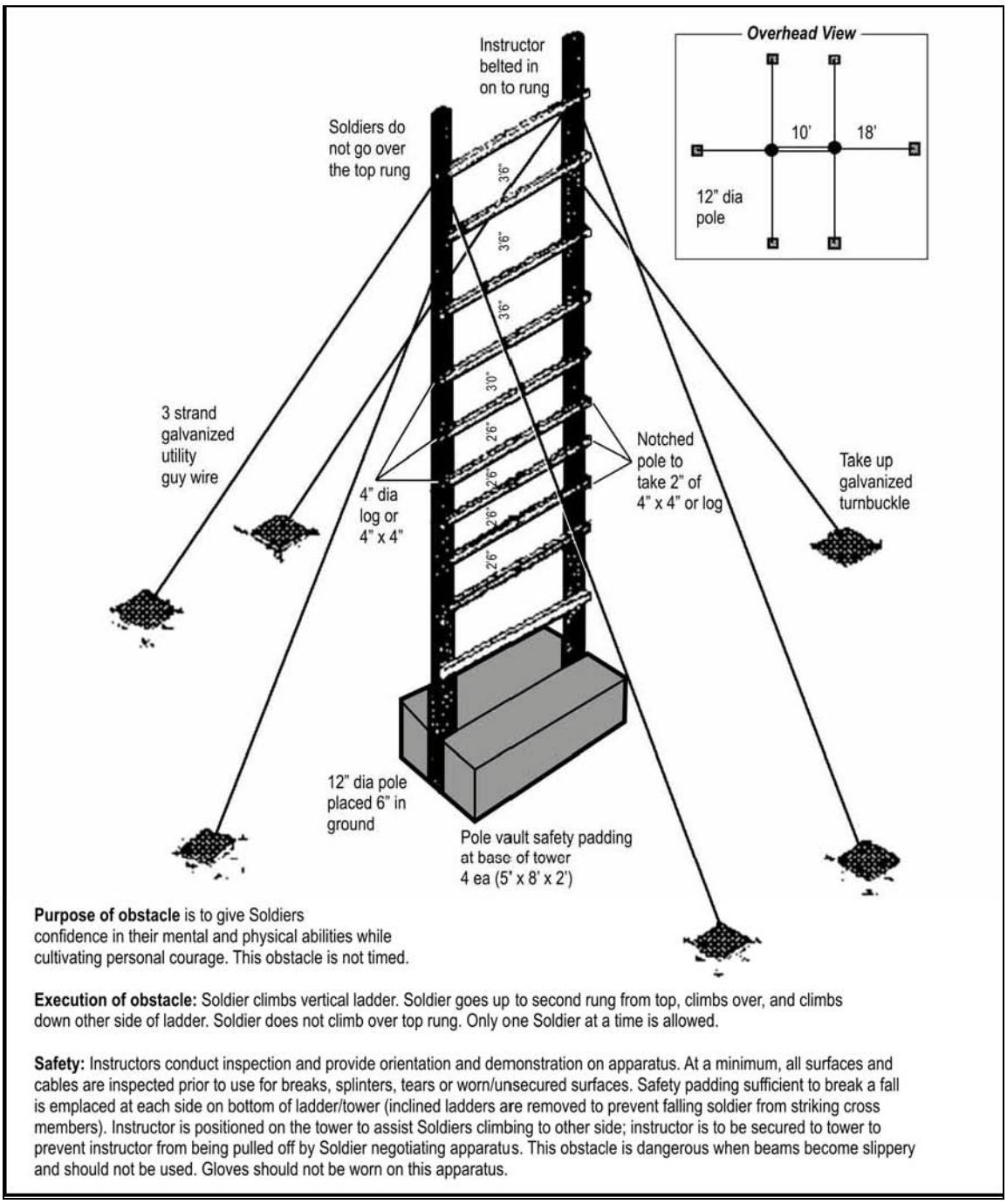

Purpose of obstacle is to give Soldiers confidence in their mental and physical abilities while cultivating personal courage. This obstacle is not timed.

Execution of obstacle: Soldier climbs vertical ladder. Soldier goes up to second rung from top, climbs over, and climbs down other side of ladder. Soldier does not climb over top rung. Only one Soldier at a time is allowed.

Safety: Instructors conduct inspection and provide orientation and demonstration on apparatus. At a minimum, all surfaces and cables are inspected prior to use for breaks, splinters, tears or worn/unsecured surfaces. Safety padding sufficient to break a fall is emplaced at each side on bottom of ladder/tower (inclined ladders are removed to prevent falling soldier from striking cross members). Instructor is positioned on the tower to assist Soldiers climbing to other side; instructor is to be secured to tower to prevent instructor from being pulled off by Soldier negotiating apparatus. This obstacle is dangerous when beams become slippery and should not be used. Gloves should not be worn on this apparatus.

Figure C-12. Confidence climb

(4) See table C-8 and figure C-13 for the "skyscraper."

Table C-8
Skyscraper checklist

	AREA	STANDARD	GO	NO GO
1	Wood timbers	a. There are no signs of rot, warping, severe weathering, or impact damage.		
		b. All timbers meet specified dimensions as stated in engineer drawings.		
		c. There are no protruding nails or splinters that may cause injury when obstacle is negotiated.		
		d. All timbers are securely connected together without excess separation between joints.		
2	Hardware	a. All bolts, nuts, and washers are in place and of the designated type and size.		
		b. All anchors are made of 3-strand galvanized guy wire or larger.		
		c. Take-up galvanized turnbuckles are used at anchor points of each cable to allow for adjustment.		
		d. Anchor cables are not used to support obstacles not properly constructed or improperly emplaced in the ground.		
		e. All cable clamps are positioned with U-bolt placed on the dead or short end of cable.		
3	Design	Professional safety staff reviews obstacle construction plans.		
4	Fall protection	a. All nets meet American National Standards Institute (ANSI) load bearing standard for personnel (ANSI 10.11/OSHA 1926.105) 3.5-inch nylon mesh, 17,500 lb impact resistant.		
		b. All nets designed for fall protection extend 8 feet out from point of potential fall.		
		c. Forged steel hooks are used to fasten net to its supports.		
		d. Nets are weight tested after initial installation and before being used as a fall protection system, whenever relocated, after major repair and every 6 months. The drop-test shall consist of 400 pound (180 kg) bag of sand 30 + or - 2 inches (76 + or - 5 cm) in diameter dropped into the net from the highest walking/working surface at which employees are exposed to fall hazards, but not from less than 42 inches (1.1 m) above that level. When the commander can demonstrate that it is unreasonable to perform the drop-test required by 29 CFR 1926.502 (c)(4)(i), the commander (or a designated competent person) shall certify that the net and net installation is in compliance with 29 CFR 1926.502(c)(4)(i) by preparing a certification record prior to the net being used as a fall protection system. The certification record must include an identification of the net and net installation for which the certification record is being prepared; the date that it was determined that the identified net and net installation were in compliance with 29 CFR 1926.502 (c)(3) and the signature of the person making the determination and certification. The most recent certification record for each net and net installation shall be available at the training site for inspection		
		e. All nets suspended below high obstacles (excess of 10 feet) have padding to prevent limbs from penetrating net.		
		f. Pole-vaulting pads are in good condition with no tears, holes, or loose material, which can trip personnel when dismounting.		
		g. Pole-vaulting pads are properly placed at base of designated obstacles.		

Purpose of obstacle is to give Soldiers confidence in their mental and physical abilities while cultivating personal courage and developing teamwork. This obstacle is not timed.

Execution of obstacle: Team of Soldiers (4+) jump or climb to first floor and either climb corner posts or help one another to higher floors. Subsequent climbing is done on side of tower over net (if available). They descend to the ground as a team as well. The top level roof is off limits/not used. One team at a time should be on the obstacle. Soldiers should never jump to the ground from above the first level.

Safety: Instructors conduct inspection and provide orientation and demonstration on apparatus. At a minimum, all surfaces and any supporting cables are inspected prior to use for breaks, splinters, tears or worn/unsecured surfaces. Safety padding sufficient to break a fall is emplaced on the ground under the climbing side(s) of the tower. This obstacle is dangerous when slippery and should not be used. Gloves should not worn on the apparatus.

NOTE: optional net on two sides allows mounting over pads then subsequent climbing over the net.

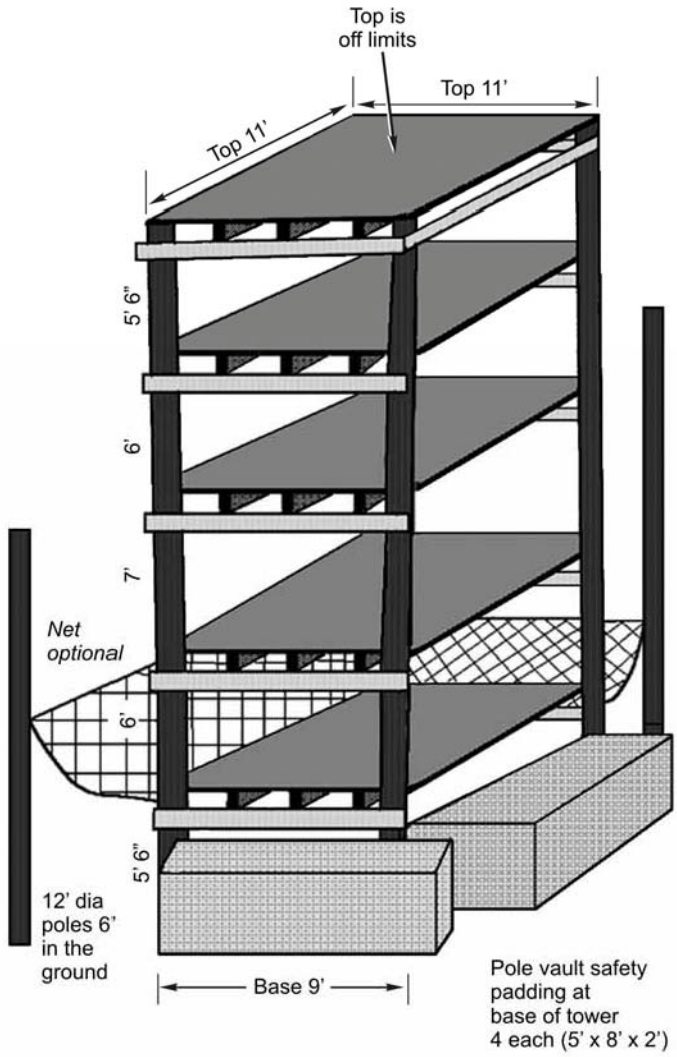

Figure C-13. Skyscraper

(5) See table C-9 and figure C-14 for the "belly robber."

Table C-9
Belly Robber checklist

	AREA	STANDARD	GO	NO GO
1.	Wood timbers	a. There are no signs of rot, warping, severe weathering, or impact damage.		
		b. All timbers meet specified dimensions as stated in engineer drawings.		
		c. There are no protruding nails or splinters that may cause injury when obstacle is negotiated.		
		d. All timbers are securely connected together without excess separation between joints.		
		e. All timbers are free of chemical coatings or substances that affect Soldier's ability to negotiate obstacle.		
2	Hardware	All bolts, nuts, and washers are in place and of the designated type and size.		
3	Design	Professional safety staff reviews obstacle construction plans.		
Remarks:				

Purpose of obstacle is to give Soldiers confidence in physical abilities while cultivating toughness.

Execution of obstacle: Soldiers step on lower log and take prone, stomach down position on the horizontal logs. Soldiers crawl over logs to opposite end of obstacle, then dismount feet first.

Safety: Instructor conducts inspection and provides orientation to obstacle. Rope gaskets must be attached to the ends of the logs to keep the hands from being pinched and to ensure logs cannot fall from perpendicular cradle logs. Logs should be free of nails and splinters. A center "lane"/line should be marked to canalize users down the center of the obstacle.

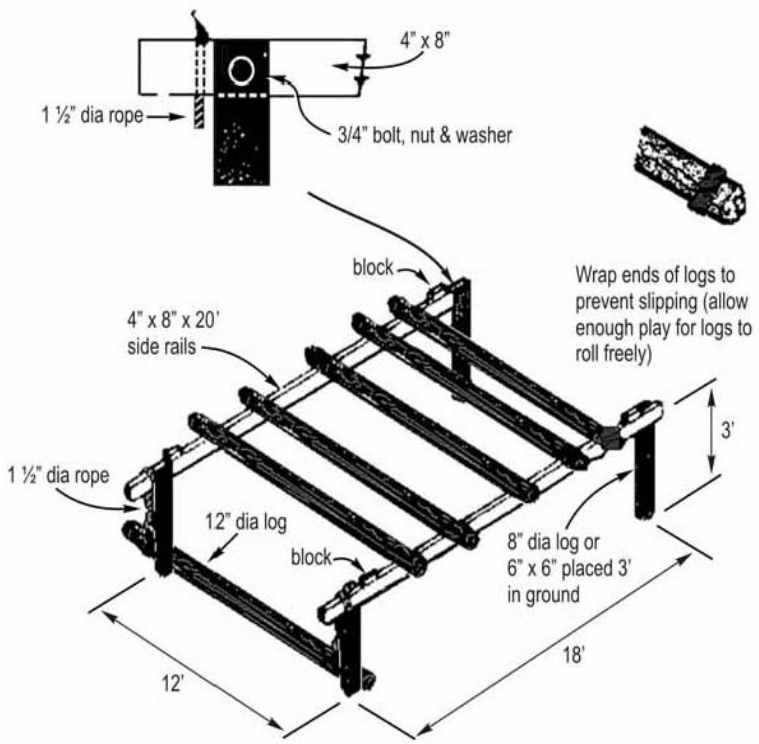

Figure C-14. Belly robber

(6) See table C-10 and figure C-15 for "the Tarzan."

Table C-10
The Tarzan checklist

	AREA	STANDARD	GO	NO GO
1	Wood timbers	a. There are no signs of rot, warping, severe weathering, or impact damage.		
		b. All timbers meet specified dimensions as stated in engineer drawings and TRADOC Regulation 350-6.		
		c. There are no protruding nails or splinters that may cause injury when obstacle is negotiated.		
		d. All timbers are securely connected together without excess separation between joints.		
		e. Rungs on horizontal ladder are modified to support Gender Integrated Training (diameter is reduced to accommodate smaller hand sizes).		
2	Hardware	All bolts, nuts, and washers are in place and of the designated type and size.		
3	Design	Professional safety staff reviews obstacle construction plans.		
Remarks:				

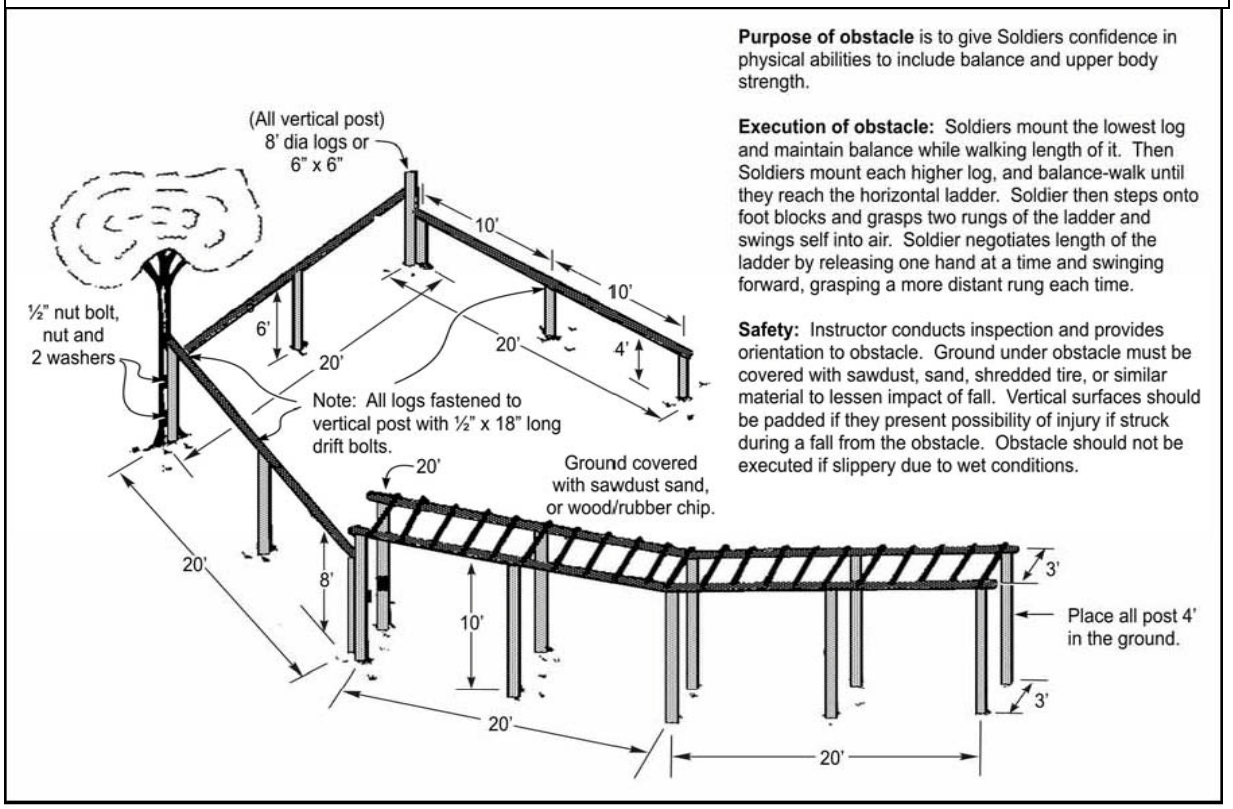

Figure C-15. The tarzan

(7) See Table C-11 and Figure C-16 for the "Low belly over."

Table C-11
Low belly over checklist

	AREA	STANDARD	GO	NO GO
1	Wood timbers	a. No signs of rot, warping, severe weathering, or impact damage.		
		b. All timbers meet specified dimensions as stated in engineer drawings.		
		c. There are no protruding nails or splinters that may cause injury when obstacle is negotiated.		
		d. All timbers are securely connected together without excess separation between joints.		
		e. All timbers are free of chemical coatings or substances that affect Soldier's ability to negotiate obstacle.		
2	Hardware	All bolts, nuts, washers are in place and of the designated type/ size.		
3	Fiber ropes	All ropes are free of rips, tears, cuts, frays, rot, or unraveled sections due to age, excessive wear, or contact with the ground.		
4	Design	Professional safety staff reviews obstacle construction plans.		
5	Padding on timbers	a. All padding on timbers is in good condition no signs of damage.		
		b. Pads are securely attached to the timber supports to prevent movement when impacted.		
Remarks:				

Purpose of obstacle is to give Soldiers confidence in physical abilities to include balance and upper body strength.

Execution of obstacle: Soldiers mount the low log and jump onto high log. They grasp over the top of the log with both arms, keeping the belly area in contact with it. They swing their legs over the log, then lower themselves to the ground.

Safety: Instructor conducts inspection and obstacle must be covered with sawdust, sand, shredded tire, or similar material to lessen impact of fall. Vertical surfaces should be padded if they present possibility of injury if struck during a fall from the obstacle. Obstacle should not be executed when slippery due to wet conditions. Spotters should be used.

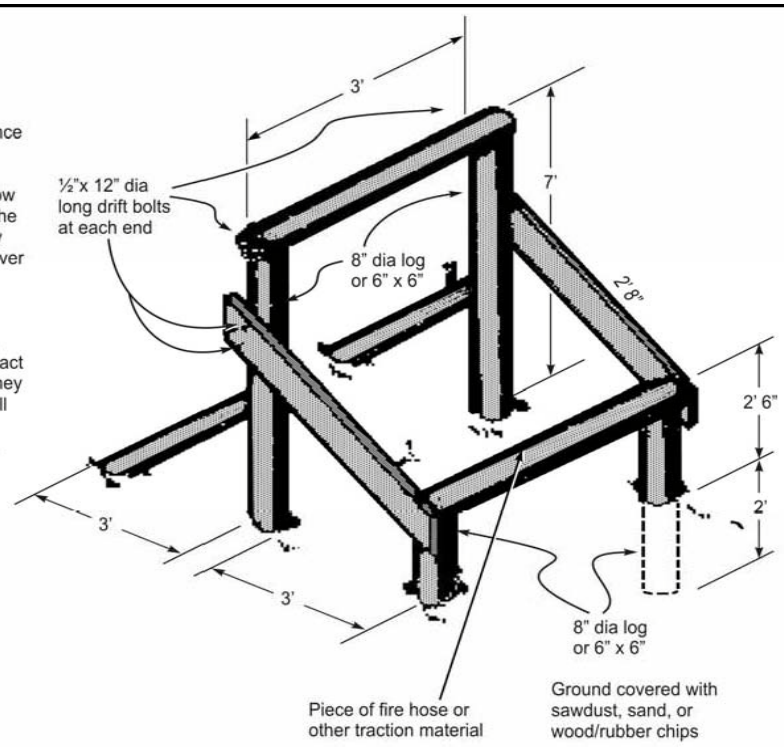

Figure C-16. Low belly over

(8) See table C-12 and figure C-17 for "the dirty name."

Table C-12
The dirty name checklist

	AREA	STANDARD	GO	NO GO
1	Wood timbers	a. There are no signs of rot, warping, severe weathering, or impact damage.		
		b. All timbers meet specified dimensions as stated in engineer drawings.		
		c. There are no protruding nails or splinters that may cause injury when obstacle is negotiated.		
		d. All timbers are securely connected together without excess separation between joints.		
2	Hardware	All bolts, nuts, and washers are in place and of the designated type and size.		
3	Design	Professional safety staff reviews obstacle construction plans.		
4	Padding on timbers	a. All padding on timbers is in good condition without signs of damage.		
		b. Pads are securely attached to the timber supports to prevent movement when impacted.		
5	Base contain-ment box	a. Base containment box is adequate for containment of absorbent material located at base of obstacle.		
		b. Containment box does not display signs of rot, damage, or instability.		
		c. Containment box is large enough to dismount from obstacle without injury.		
Remarks:				

Purpose of obstacle is to give Soldiers confidence in physical abilities to include balance and upper body strength.

Execution of obstacle: Soldiers mount the low log and jump onto middle log. Soldiers pull themselves onto middle log and jump onto height log. They grasp over the top of the log with both arms, keeping the belly area in contact with it. They swing their legs over the log, then lower themselves to the ground.

Safety: Instructor conducts inspection and provides orientation to obstacle. Ground under obstacle must be covered with sawdust, sand, shredded tire, or similar material to lessen impact of fall. Vertical surfaces should be padded if they present possibility of injury if struck during a fall from the obstacle. Obstacle should not be executed when slippery due to wet conditions. Spotters should be used.

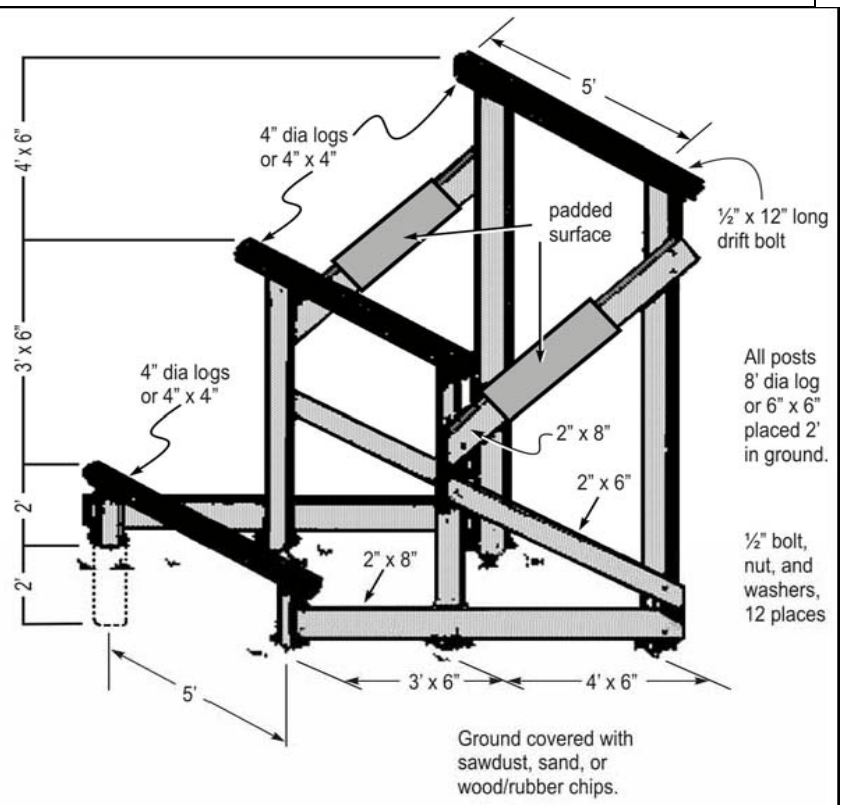

Figure C-17. The dirty name

(8) See table C-13 and figure C-18 for “the tough nut.”

Table C-13
The tough nut checklist

	AREA	STANDARD	GO	NO GO
1	Wood timbers	a. There are no signs of rot, warping, severe weathering, or impact damage.		
		b. All timbers meet specified dimensions as stated in engineer drawings.		
		c. There are no protruding nails or splinters that may cause injury when obstacle is negotiated.		
		d. All timbers are securely connected together without excess separation between joints.		
		e. All timbers are free of chemical coatings or substances that affect Soldier’s ability to negotiate obstacle.		
2	Hardware	All wire/bolts are of the designated type and size.		
3	Design	a. Professional safety staff reviews obstacle construction plans.		
		b. Center height of “X” does not exceed 30 inches.		
Remarks:				

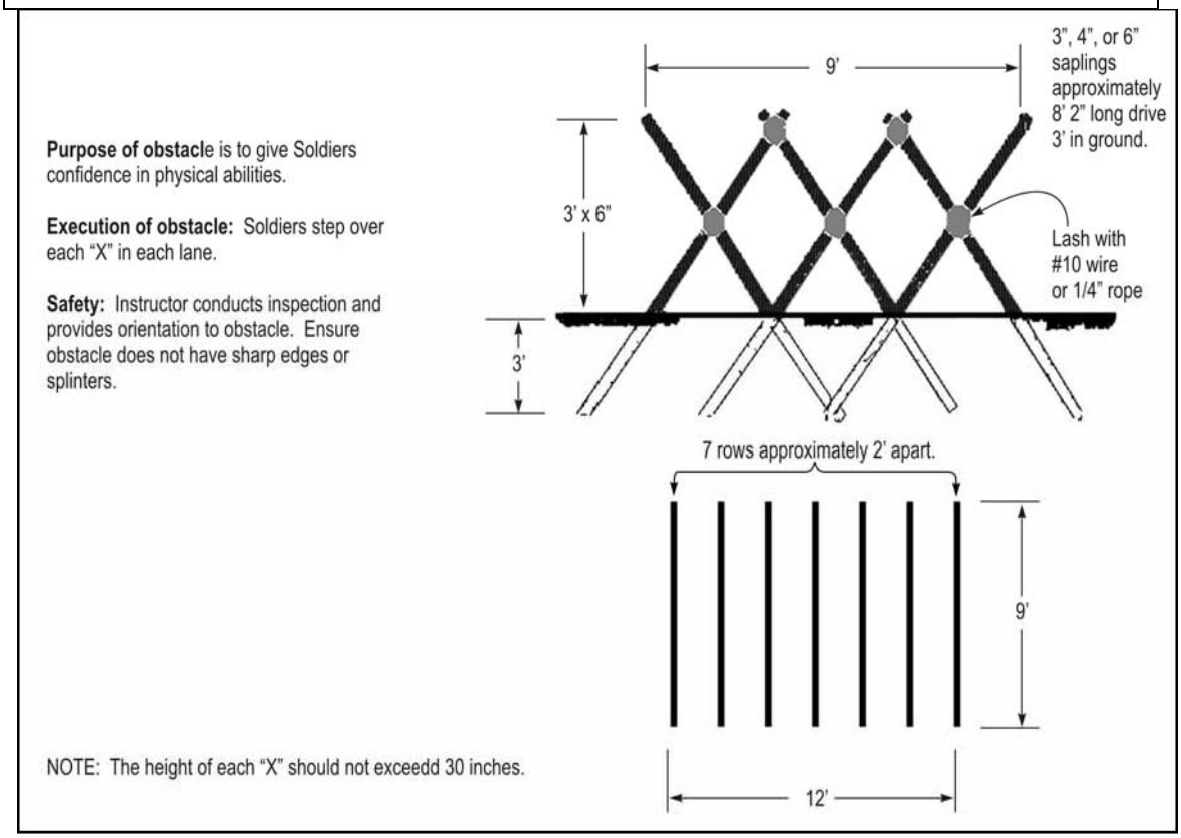

Figure C-18. The tough nut

(9) See table C-14 and figure C-19 for the “belly crawl.”

Table C-14
Belly crawl checklist

	AREA	STANDARD	GO	NO GO
1	Wood timbers	a. There are no signs of rot, warping, severe weathering, or impact damage.		
		b. All timbers meet specified dimensions as stated in engineer drawings.		
		c. There are no protruding nails or splinters that may cause injury when obstacle is negotiated.		
2	Hardware	All wires, screws, or nails are in place and of the designated type and size.		
3	Design	Professional safety staff reviews obstacle construction plans.		
4	Surfaces	All surfaces beneath low surfaces are free of hazards with the potential to cause injury.		
Remarks:				

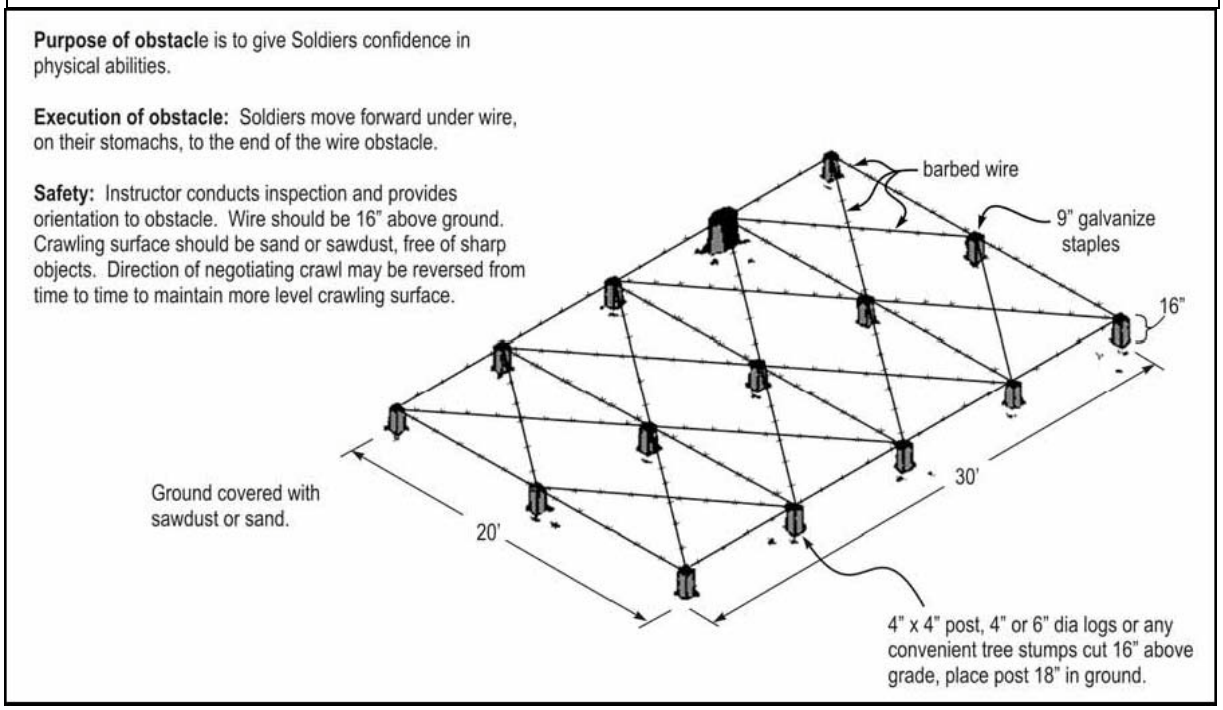

Figure C-19. Belly crawl

(10) See table C-15 and figure C-20 for the "inclining wall."

Table C-15
Inclining wall checklist

	AREA	STANDARD	GO	NO GO
1	Wood timbers	a. There are no signs of rot, warping, severe weathering, or impact damage.		
		b. All timbers meet specified dimensions as stated in engineer drawings.		
		c. There are no protruding nails or splinters that may cause injury when obstacle is negotiated.		
		d. All timbers are securely connected together without excess separation between joints.		
2	Wall boards	a. All boards are securely attached to structure with proper hardware.		
		b. All boards free of protruding nails, splinters, rot, or damage.		
		c. Edges of boards rounded/smooth where used to support individual's weight..		
3	Hardware	a. All bolts, nuts, and washers in place and of the designated type, size, and placement.		
		b. All cable clamps are positioned with U-bolt placed on the dead or short end of cable.		
4	Design	Professional safety staff reviews obstacle construction plans.		
Remarks:				

Purpose of obstacle is to give Soldiers confidence in physical abilities.

Execution of obstacle: Soldiers approach the underside of the wall, jump up and grasp the top and pull themselves over the top . Soldiers slide or jump down the incline to the ground.

Safety: Instructor conducts inspection and provides orientation to obstacle. Wire should be 16" above ground. Crawling surface should be sand or sawdust, free of sharp objects. Direction of negotiating crawl may be reversed from time to time to maintain more level crawling surface.

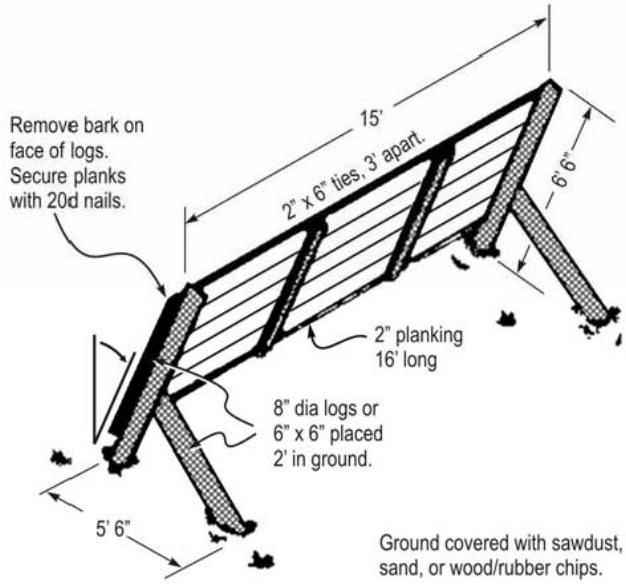

Figure C-20. Inclining wall

(10) See table C-16 and figure C-21 for the "swing, stop, and jump."

Table C-16
Swing, stop, and jump checklist

	AREA	STANDARD	GO	NO GO
1	Wood timbers	a. There are no signs of rot, warping, severe weathering, or impact damage.		
		b. All timbers meet specified dimensions as stated in engineer drawings.		
		c. There are no protruding nails or splinters that may cause injury when obstacle is negotiated.		
		d. All timbers are securely connected together without excess separation between joints.		
		e. All timbers are free of chemical coatings or substances that affect Soldier's ability to negotiate obstacle.		
2	Hardware	a. All bolts, nuts, and washers are in place and of the designated type and size.		
		b. Surmounting ropes have knots at ends or are taped to prevent fraying.		
3	Fiber ropes	All ropes are free of rips, tears, cuts, frays, rot, or unraveled sections due to age, excess wear, or contact with the ground.		
4	Design	Professional safety staff reviews obstacle construction plans.		
5	Padding on timbers	a. All padding on timbers is in good condition without signs of damage.		
		b. Pads are securely attached to the timber supports to prevent movement when impacted.		
6	Base containment box	a. Base containment box is adequate for containment of absorbent material located at base of obstacle.		
		b. Containment box does not display signs of rot, damage, or instability.		
		c. Containment box is large enough to dismount from obstacle without causing injury.		
Remarks:				

Purpose of obstacle is to give Soldiers confidence in physical abilities.

Execution of obstacle: Soldiers gain momentum with a short run, grasp the rope, and swing their bodies forward to the top of the wall. They release the rope while standing on the wall and jump to the ground.

Safety: Instructor conducts inspection and provides orientation to obstacle. Wood surface must be free of nails and splinters. Ground under obstacle should be covered with sand, sawdust, or shredded rubber to absorb shock and falls. Vertical surfaces may be padded if there is danger of falling Soldier striking support or similar structures. Rope should be tested daily to ensure no frays or loosening of attachment to overhead support. Obstacle should not be used when wall surface is wet.

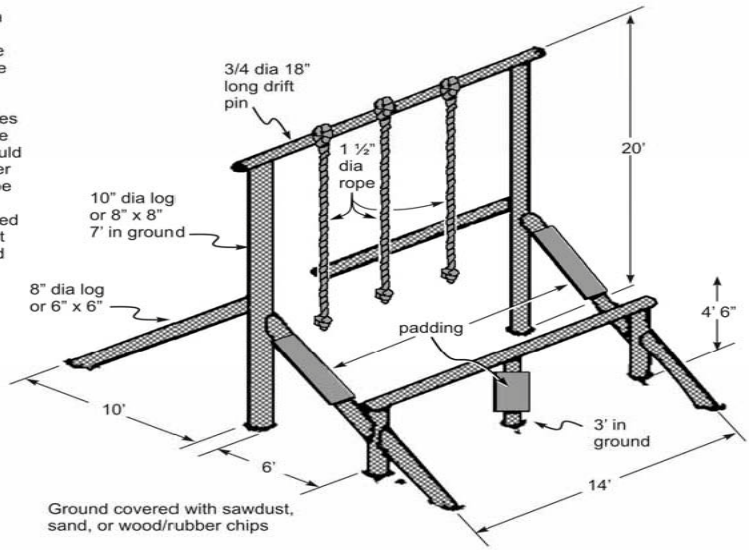

Figure C-21. Swing, stop, and jump

(11) See table C-17 and figure C-22 for the “six vaults.”

Table C-17
Six vaults checklist

	AREA	STANDARD	GO	NO GO
1	Wood timbers	a. There are no signs of rot, warping, severe weathering, or impact damage.		
		b. All timbers meet specified dimensions as stated in engineer drawings.		
		c. There are no protruding nails or splinters that may cause injury when obstacle is negotiated.		
		d. All timbers are securely connected together without excess separation between joints.		
		e. All timbers are free of chemical coatings or substances that affect Soldier’s ability to negotiate obstacle.		
2	Hardware	All bolts, nuts, and washers are in place and of the designated type and size.		
3	Design	Professional safety staff reviews obstacle construction plans.		
Remarks:				

Purpose of obstacle is to give Soldiers confidence in physical abilities.

Execution of obstacle: Soldiers step over each bar; they either alternate legs or use the same leg each time while making an effort not to use their hands).

Safety: Instructor conducts inspection and provides orientation to obstacle. Wood surface must be free of nails and splinters. Soldiers must be spaced so as to prevent kicking each other.

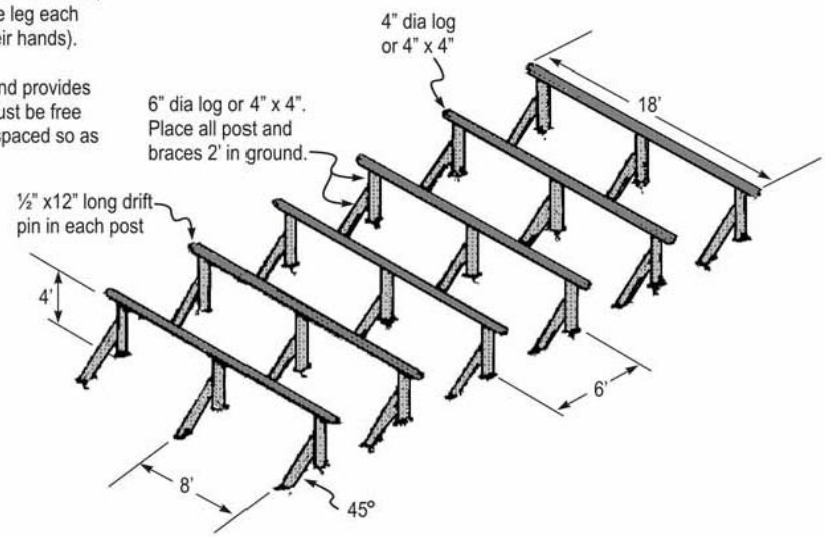

NOTE: Height of the top of the horizontal logs should not exceed 40 inches.

Figure C-22. Six vaults

(12) See table C-18 and figure C-23 for the “easy balancer.”

Table C-18
Easy balancer checklist

	AREA	STANDARD	GO	NO GO
1	Wood timbers	a. There are no signs of rot, warping, severe weathering, or impact damage.		
		b. All timbers meet specified dimensions as stated in engineer drawings.		
		c. There are no protruding nails or splinters that may cause injury when obstacle is negotiated.		
		d. All timbers are securely connected together without excess separation between joints.		
		e. All timbers are free of chemical coatings or substances that affect Soldier's ability to negotiate obstacle.		
2	Hardware	All bolts, nuts, and washers are in place and of the designated type and size.		
3	Design	Professional safety staff reviews obstacle construction plans.		
4	Base containment box	a. Base containment box is adequate for containment of absorbent material located at base of obstacle.		
		b. Containment box does not display signs of rot, damage, or instability.		
		c. Containment box is large enough to dismount from obstacle without causing injury.		
Remarks:				

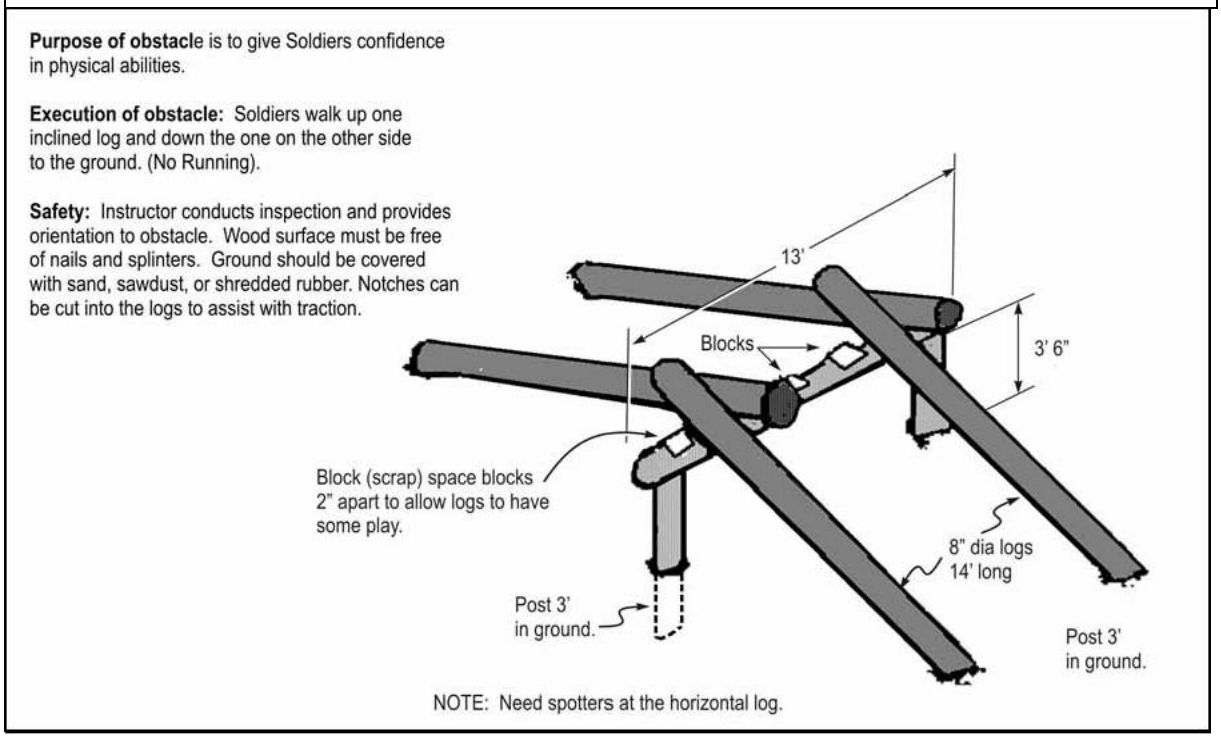

Figure C-23. Easy balancer

(13) See table C-19 and figure C-24 for the "low wire."

Table C-19
Low wire checklist

	AREA	STANDARD	GO	NO GO
1	Wood timbers	a. There are no signs of rot, warping, severe weathering, or impact damage.		
		b. All timbers meet specified dimensions as stated in engineer drawings.		
		c. There are no protruding nails or splinters that may cause injury when obstacle is negotiated.		
		d. All timbers are securely connected together without excess separation between joints.		
2	Hardware	All wire, nails, or screws are in place and of the designated type and size.		
3	Design	Professional safety staff reviews obstacle construction plans.		
4	Surfaces	All surfaces beneath low obstacles are free of hazards with the potential to cause injury.		
Remarks:				

Purpose of obstacle is to give Soldiers confidence in physical abilities.

Execution of obstacle: Soldiers move forward under wire, on their backs while raising wire with their hands to clear their bodies. Continuing to the end of the wire obstacle.

Safety: Instructor conducts inspection and provides orientation to obstacle. Wire should lay loosely on the ground. Crawling surface should be sand or sawdust, free of sharp objects. Direction of negotiating crawl may be reversed from time to time to maintain more level crawling surface.

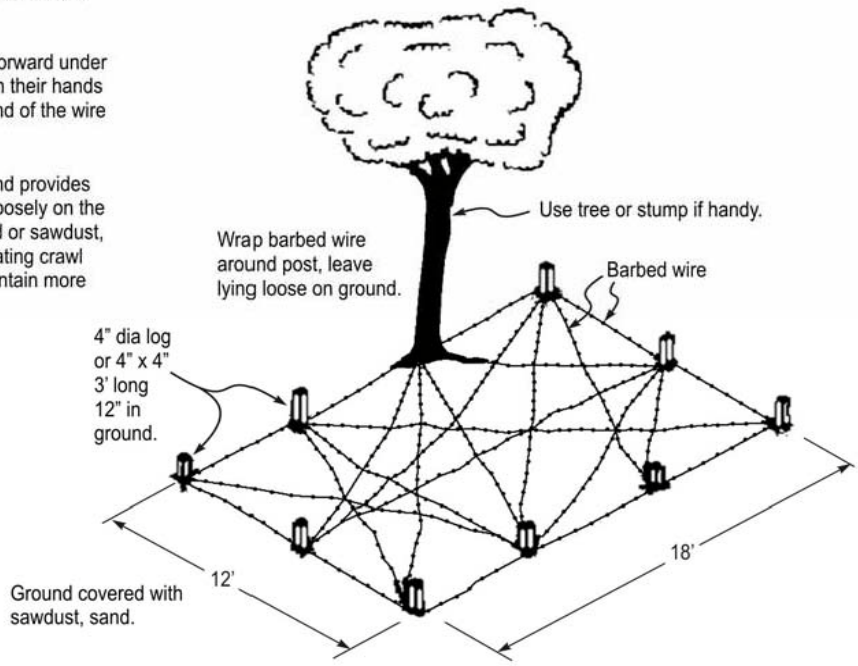

Figure C-24. Low wire

(14) See table C-20 and figure C-25 for "the belly buster."

Table C-20
The belly buster checklist

	AREA	STANDARD	GO	NO GO
1	Wood timbers	a. There are no signs of rot, warping, severe weathering, or impact damage.		
		b. All timbers meet specified dimensions as stated in engineer drawings.		
		c. There are no protruding nails or splinters that may cause injury when obstacle is negotiated.		
		d. All timbers are securely connected together without excess separation between joints.		
		e. All timbers are free of chemical coatings or substances that affect Soldier's ability to negotiate obstacle.		
2	Hardware	a. All bolts, nuts, and washers are in place and of the designated type/size.		
		b. Soldiers are warned to keep hands and fingers away from parts of log resting on cradle.		
		c. Soldiers are informed not to rock or roll log while others are negotiating obstacle.		
3	Design	Professional safety staff reviews obstacle construction plans.		
4	Base containment box	a. Base containment box is adequate for containment of absorbent material located at base of obstacle.		
		b. Containment box does not display signs of rot, damage, or instability.		
		c. Containment box is large enough to dismount from obstacle without causing injury.		
Remarks:				

Purpose of obstacle is to give Soldiers confidence in physical abilities.

Execution of obstacle: Soldiers vault, jump or climb over log.

Safety: Instructor conducts inspection and provides orientation to obstacle. Soldiers must be warned that log is not stationary. Soldiers must keep hands and fingers away from parts of log resting on cradle. Soldiers should not rock or roll log while others are negotiatiing it. Ground under obstacle should be covered with sand, sawdust or shredded rubber to lessen impact in event of fall.

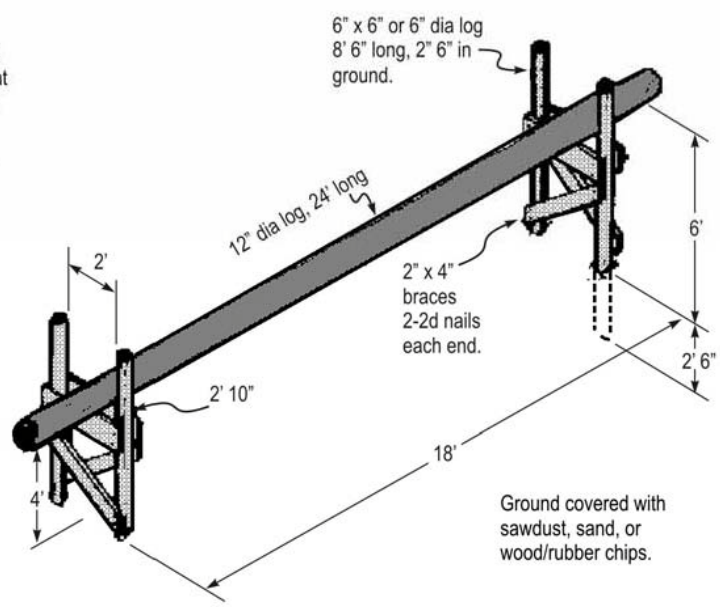

Figure C-25. Belly buster

(15) See table C-21 and figure C-26 for “the belly buster.”

Table C-21
Hip-hip checklist

	AREA	STANDARD	GO	NO GO
1	Wood Timbers	a. There are no signs of rot, warping, severe weathering, or impact damage.		
		b. All timbers meet specified dimensions as stated in engineer drawings.		
		c. There are no protruding nails or splinters that may cause injury when obstacle is negotiated.		
		d. All timbers are securely connected together without excess separation between joints.		
		e. All timbers are free of chemical coatings or substances that affect Soldier’s ability to negotiate obstacle.		
2	Hardware	All bolts, nuts, and washers are in place and of the designated type and size.		
3	Design	Professional safety staff reviews obstacle construction plans.		
4	Surfaces	All surfaces beneath low obstacles are free of hazards with the potential to cause injury.		
Remarks:				

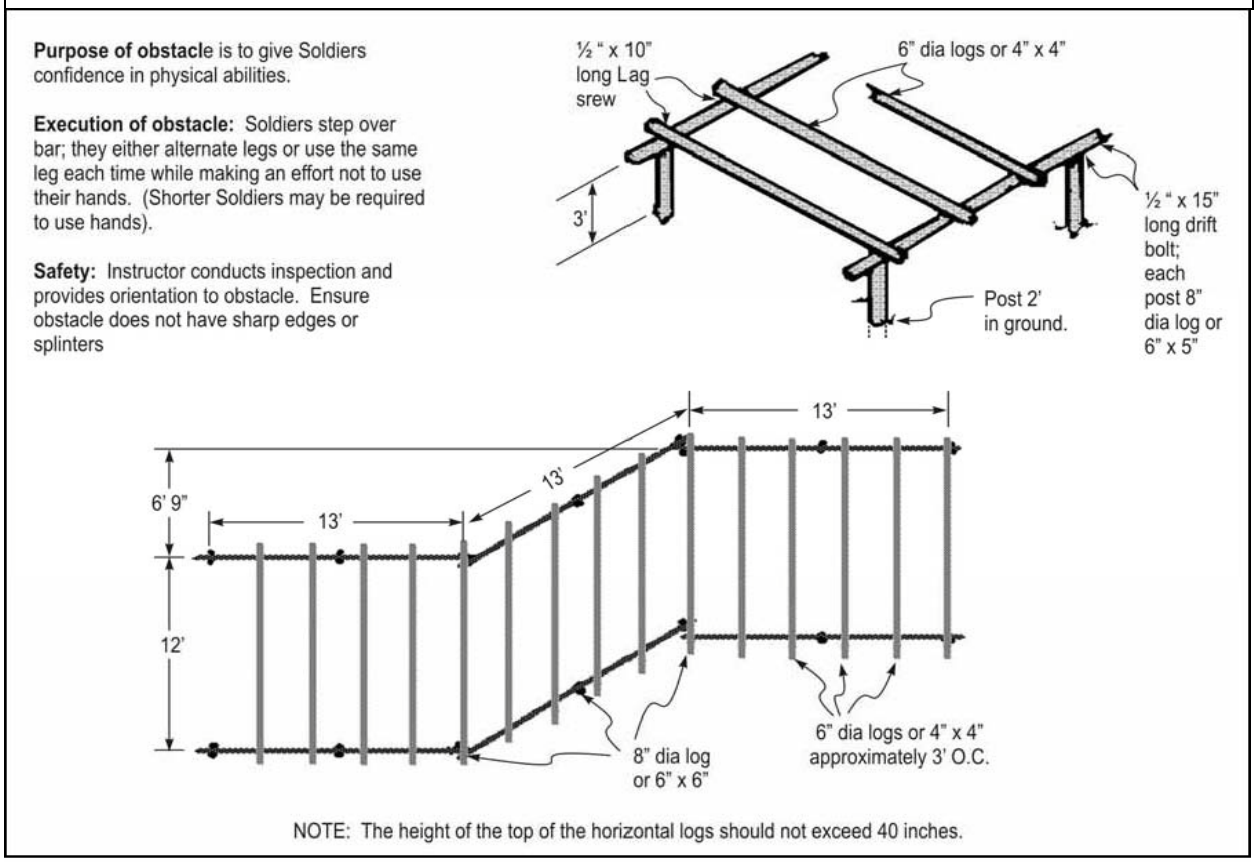

Figure C-26. Hip-hip

(16) See table C-22 and figure C-27 for the “reverse climb.”

Table C-22
Reverse climb checklist

	AREA	STANDARD	GO	NO GO
1	Wood timbers	a. There are no signs of rot, warping, severe weathering, or impact damage.		
		b. All timbers meet specified dimensions as stated in engineer drawings.		
		c. There are no protruding nails or splinters that may cause injury when obstacle is negotiated.		
		d. All timbers are securely connected together without excess separation between joints.		
		e. All timbers are free of chemical coatings or substances that affect Soldier's ability to negotiate obstacle.		
2	Hardware	All bolts, nuts, and washers are in place and of the designated type and size.		
3	Design	Professional safety staff reviews obstacle construction plans.		
4	Padding on timbers	a. All padding on timbers is in good condition without signs of damage.		
		b. Pads are securely attached to the timber supports to prevent movement when impacted.		
5	Base containment box	a. Base containment box is adequate for containment of absorbent material located at base of obstacle.		
		b. Containment box does not display signs of rot, damage, or instability.		
		c. Containment box is large enough to dismount from obstacle without injury.		
Remarks:				

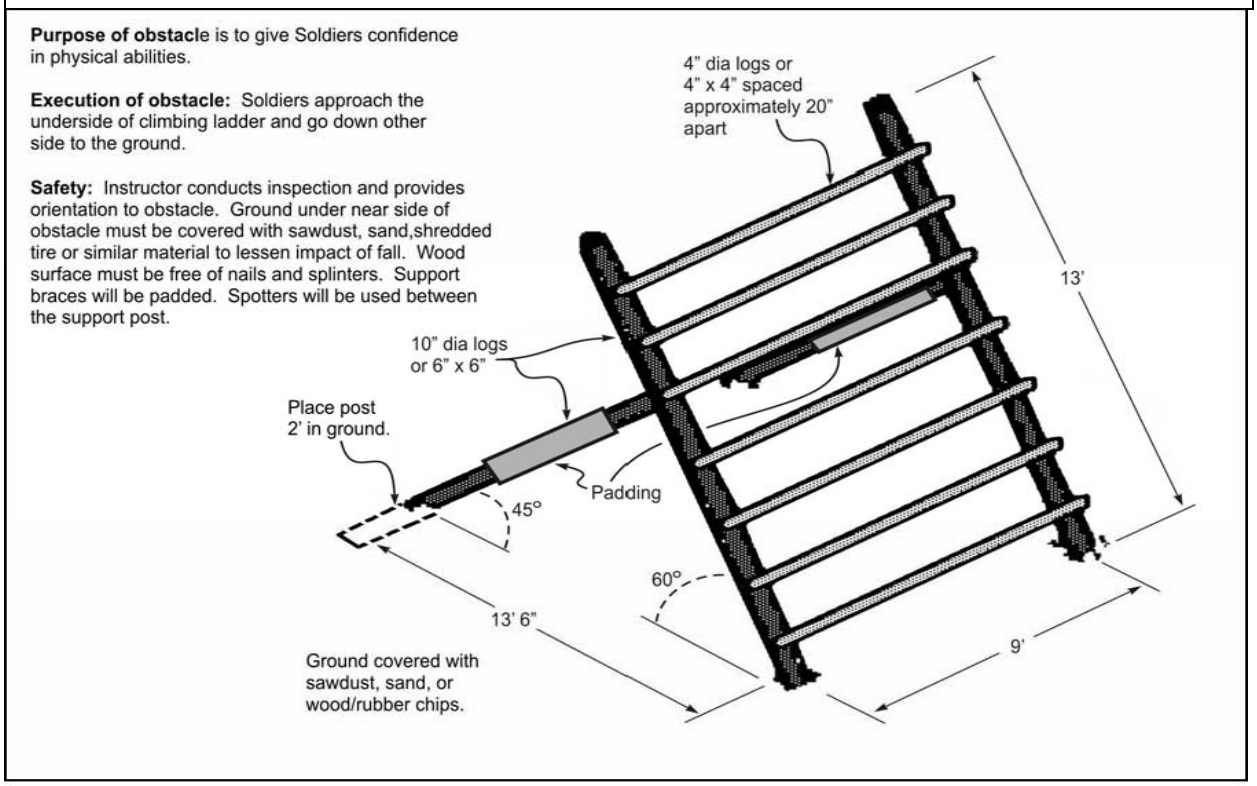

Figure C-27. Reverse climb

(17) See table C-23 and figure C-28 for "the weaver."

Table C-23
The weaver checklist

	AREA	STANDARD	GO	NO GO
1	Wood timbers	a. There are no signs of rot, warping, severe weathering, or impact damage.		
		b. All timbers meet specified dimensions as stated in engineer drawings.		
		c. There are no protruding nails or splinters that may cause injury when obstacle is negotiated.		
		d. All timbers are securely connected together without excess separation between joints.		
		e. All timbers are free of chemical coatings or substances that affect Soldier's ability to negotiate obstacle.		
2	Hardware	All bolts, nuts, and washers are in place and of the designated type and size.		
3	Design	Professional safety staff reviews obstacle construction plans.		
4	Base containment box	a. Base containment box is adequate for containment of absorbent material located at base of obstacle.		
		b. Containment box does not display signs of rot, damage, or instability.		
		c. Containment box is large enough to dismount from obstacle without causing injury.		
Remarks:				

Purpose of obstacle is to give Soldiers confidence in physical abilities.

Execution of obstacle: Soldiers move from one end of the obstacle to the other by weaving their bodies under one bar and over the next.

Safety: Instructor conducts inspection and provides orientation to obstacle. Ground under obstacle must be covered with sawdust, sand, shredded tire or similar material to lessen impact of fall. Wood surface must be free of nails and splinters. Spotters should be used in center. Safety pads will be used under the apex.

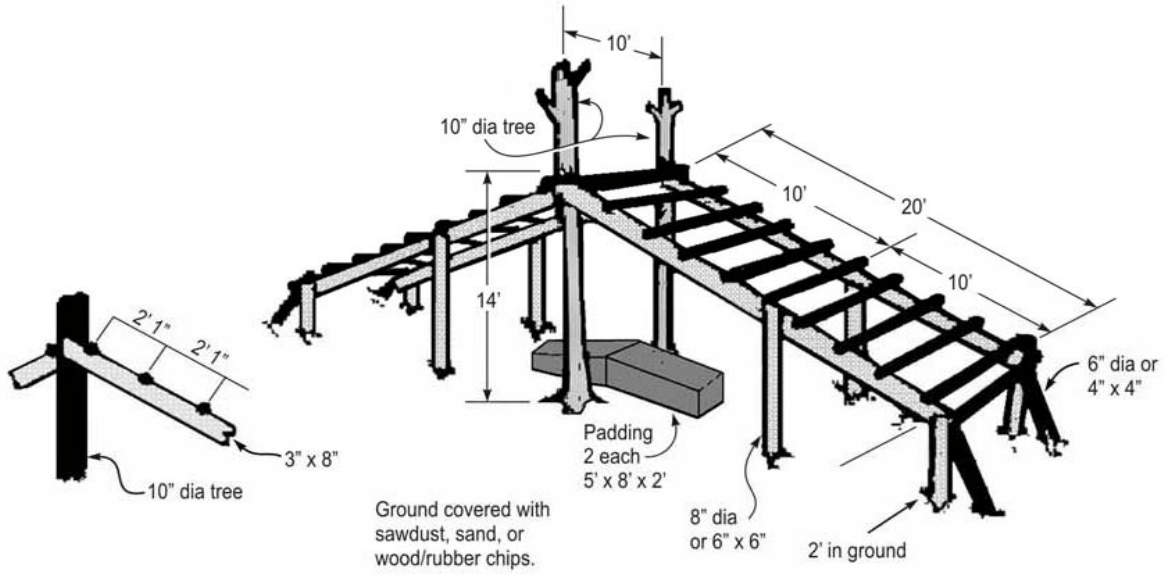

Figure C-28. The weaver

(18) See table C-24 and figure C-29 for the "balancing logs."

Table C-24
Balancing logs checklist

	AREA	STANDARD	GO	NO GO
1	Wood timbers	a. There are no signs of rot, warping, severe weathering, or impact damage.		
		b. All timbers meet specified dimensions as stated in engineer drawings.		
		c. There are no protruding nails or splinters that may cause injury when obstacle is negotiated.		
		d. All timbers are securely connected together without excess separation between joints.		
		e. All timbers are free of chemical coatings or substances that affect Soldier's ability to negotiate obstacle.		
2	Hardware	All bolts, nuts, and washers are in place and of the designated type and size.		
3	Design	Professional safety staff reviews obstacle construction plans.		
Remarks:				

Purpose of obstacle is to give Soldiers confidence in physical abilities.

Execution of obstacle: Soldiers move from one end of the obstacle to the other by weaving their bodies under one bar and over the next.

Safety: Instructor conducts inspection and provides orientation to obstacle. Ground under obstacle must be covered with sawdust, sand, shredded tire or similar material to lessen impact of fall. Wood surface must be free of nails and splinters. Spotters should be used in center. Safety pads will be used under the apex.

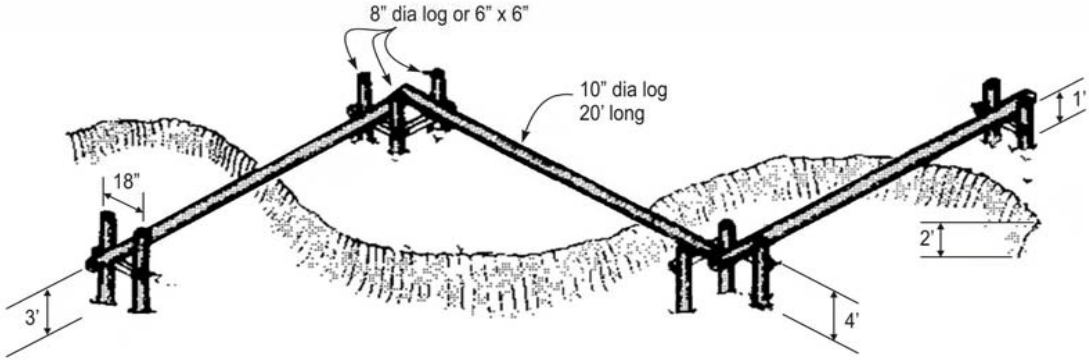

Figure C-29. Balancing logs

(19) See table C-25 and figure C-30 for the "island hoppers."

Table C-25
Island hoppers checklist

	AREA	STANDARD	GO	NO GO
1	Wood timbers	a. There are no signs of rot, warping, severe weathering, or impact damage.		
		b. All timbers meet specified dimensions as stated in engineer drawings.		
2	Design	Professional safety staff reviews obstacle construction plans.		
Remarks:				

Purpose of obstacle is to give Soldiers confidence in physical abilities.

Execution of obstacle: Soldiers jump from one log to another until obstacle is negotiated from near to far side.

Safety: Instructor conducts inspection and provides orientation to obstacle. Wood surface must be free of sharp edges and should not be slippery) it may be necessary to rough up tops of logs/stumps to ensure traction or use 1-inch nails driven into the tops).

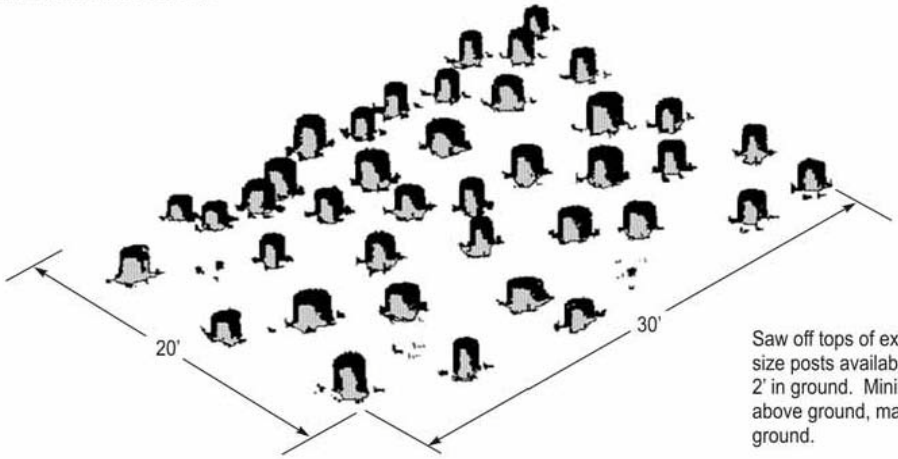

Saw off tops of existing stumps or use any size posts available 8" dia or larger. Place 2' in ground. Minimum height of stump 6" above ground, maximum height 26" above ground.

Figure C-30. Island hoppers

(20) See table C-26 for the "fitness tower."

Table C-26
Fitness tower checklist

	Area	Standard	GO	NO GO
1	Adminis-tration	Copies of engineer drawings are maintained at the local safety office/facility engineers.		
2	Wood timbers	a. There are no signs of rot, warping, severe weathering, or impact damage.		
		b. All timbers meet specified dimensions as stated in engineer drawings and TRADOC Regulation 350-6.		
		c. There are no protruding nails or splinters that may cause injury when obstacle is negotiated.		
		d. All timbers are connected securely together without excess separation between joints.		
		e. All timbers are free of chemical coatings or substances that affect Soldier's ability to negotiate obstacle.		
3	Hardware	a. All bolts, nuts, and washers are in place and of the designated type and size.		
		b. All anchors are made of 3-strand galvanized guy wire.		
		c. Take-up galvanized turnbuckles are used at anchor points of each cable to allow for adjustment.		
		d. Anchor cables are not used to support obstacles not properly constructed or improperly emplaced in the ground.		
		e. All cable clamps are positioned with U-bolt placed on the dead or short end of cable.		
		f. All attachment points are tested to ensure each will support 1.5 times usage weight.		
		g. Certified rappel masters inspect all ropes used for rappelling prior to each use.		
		h. Ropes used for surmounting are all 1.5 inches in diameter.		
4	Design	Professional safety staff reviews obstacle construction plans.		
5	Fall protection	a. All areas in and around tower facility are covered with non-compressed wood chips, mulch, sawdust, or shredded tire rubber.		
		b. All nets designed for fall protection extend 8 feet out from point of potential fall.		
		c. Forged steel hooks are used to fasten net to its supports.		
		d. Nets are weight tested after initial installation and before being used as a fall protection system, whenever relocated, after major repair and every 6 months. The drop-test shall consist of 400 pound (180 kg) bag of sand 30 + or - 2 inches (76 + or - 5 cm) in diameter dropped into the net from the highest walking/working surface at which employees are exposed to fall hazards, but not from less than 42 inches (1.1 m) above that level. When the commander can demonstrate that it is unreasonable to perform the drop-test required by 29 CFR 1926.502 (c)(4)(i), the commander (or a designated competent person) shall certify that the net and net installation is in compliance with 29 CFR 1926.502(c)(4)(i) by preparing a certification record prior to the net being used as a fall protection system. The certification record must include an identification of the net and net installation for which the certification record is being prepared; the date that it was determined that the identified net and net installation were in compliance with 29 CFR 1926.502 (c)(3) and the signature of the person making the determination and certification. The most recent certification record for each net and net installation shall be available at the training site for inspection.		
		e. Nets with padding are placed beneath all suspended bridges.		

	AREA	STANDARD	GO	NO GO
6	Rappelling	a. Instructors working at the top of tower are secured to tower with fall arrest system/attached harness.		
		b. Only certified and current rappel masters conduct rappel operations.		
		c. All anchor point have been tested to support loads of 5000 lbs.		
		d. All anchor points are secure and free of damage.		
		e. Top edge of rappel wall is padded to protect rope from cuts or abrasion.		
		f. Protective padding at top of rappel wall is tightly secured on all edges.		
		g. Rappel wallboards are free of damage, rot, protruding nails, and secured to tower with proper hardware.		
		h. Rappel landing area is free of obstructions and hazards.		
		i. Landing areas extends an uninterrupted distance of 15 feet from base of tower.		
		j. Landing area is cushioned with 24 inches of non-compressed wood chips, mulch, sawdust, 18 inches of sand, or 12 inches of shredded tire rubber.		
		k. Landing area cushioning material held in place by a containment barrier (timbers/sand bags).		
7	Ladders	a. All ladders are inspected for structural integrity.		
		b. Rungs spacing on ladders do not exceed 36 inches.		
		c. Nets are placed under all rope bridges.		
		d. Nets are weight tested after initial installation and before being used as a fall protection system, whenever relocated, after major repair and every 6 months. The drop-test shall consist of 400 pound (180 kg) bag of sand 30 + or - 2 inches (76 + or - 5 cm) in diameter dropped into the net from the highest walking/working surface at which employees are exposed to fall hazards, but not from less than 42 inches (1.1 m) above that level. When the commander can demonstrate that it is unreasonable to perform the drop-test required by 29 CFR 1926.502 (c)(4)(i), the commander (or a designated competent person) shall certify that the net and net installation is in compliance with 29 CFR 1926.502(c)(4)(i) by preparing a certification record prior to the net being used as a fall protection system. The certification record must include an identification of the net and net installation for which the certification record is being prepared; the date that it was determined that the identified net and net installation were in compliance with 29 CFR 1926.502 (c)(3) and the signature of the person making the determination and certification. The most recent certification record for each net and net installation shall be available at the training site for inspection.		
		e. Nets used for fall protection have padding installed to prevent limbs from passing through webbing.		
Remarks:				

C-5. Fall Protection

a. Fall protection will be provided for those obstacles designated as high, or have the ability to cause injury during a fall, or required by design.

b. The areas under and around obstacles will be covered with an impact reducing material appropriate for preventing serious injury in the event a Soldier falls while negotiating subject obstacle.

c. When purchasing fall protection equipment required for an obstacle, installations will ensure equipment meets or exceeds standards without creating a greater hazard. Where impact-reducing material is required, sand, wood chips, saw dust, or shredded tire rubber is sufficient.

d. Below are required essential items of fall protection, identified by obstacle.

(1) "The tough one:"

(a) Wood chips/sand/or shredded rubber beneath obstacle.

(b) Pole vault safety pad placed at base of obstacle.

(c) Safety net placed beneath obstacle, extended 8 feet out from point of potential fall. All netting will be rated for outside use and meet OSHA specifications for fall protection.

(d) Eye bolt or hook for instructor safety harness positioned at top of obstacle.

(2) "Inverted rope descent/slide for life:"

(a) Instructor platform with eye bolt or metal hook to secure safety harness.

(b) Net placed beneath the length of descent rope.

(c) Padding placed on net beneath descent rope.

(d) Pads at end of net near release point.

(e) Pole vault pad at the base of release point.

(f) The area under and around (minimum of 6 feet) obstacles covered with impact reducing material.

(3) "Confidence climb:"

(a) Eye bolt or hook for instructor's safety harness at top of obstacle.

(b) Pole vault padding on both sides at base of obstacle (4 each @ 5 feet x 8 feet x 2 feet).
(c) Ground around base of obstacle covered with impact reducing material.

(4) “Skyscraper:”

(a) Pole vault padding at base of tower.

(b) Netting extended from first level (optional).

(5) “Belly robber:” Ground beneath obstacle covered with impact reducing material.

(6) “The Tarzan:” Ground beneath obstacle covered with impact reducing material.

(7) “Low belly over:”

(a) Ground covered with impact reducing material.

(b) Tops of side rails covered with padding.

(8) “The dirty name:”

(a) Padding on tops of upper side braces.

(b) Ground beneath obstacle covered with impact reducing material.

(9) “The tough nut:” Ground beneath obstacle covered with impact reducing material (optional).

(10) “Belly crawl:” Ground beneath obstacle covered with impact reducing material.

(11) “Inclining wall:” Ground beneath obstacle covered with impact reducing material.

(12) “High step over” - Ground beneath obstacle covered with impact reducing material.

(13) “Swing, stop, and jump:”

(a) Padding on tops of front support logs.

(b) Ground beneath obstacle covered with impact reducing material.

(14) “Six vaults:” Ground beneath obstacle covered with impact reducing material.

(15) “Easy balancer:” Ground beneath obstacle covered with impact reducing material.

(16) “Low wire” Ground beneath obstacle covered with impact reducing material.

(17) “The belly buster:” Ground beneath obstacle covered with impact reducing material.
(18) “Hip-hip:” Ground beneath obstacle covered with impact reducing material.

(19) “Reverse climb:”

(a) Padding on the tops of rear support logs.

(b) Ground beneath obstacle covered with impact reducing material.

(20) “The weaver:”

(a) Pole vault padding beneath center of obstacle.

(b) Ground beneath obstacle covered with impact reducing material.

(21) “Balancing logs:” Ground beneath obstacle covered with impact reducing material.

(22) “Island hopper:” Ground beneath obstacle covered with impact reducing material.

e. Safety equipment (nets, pads, and ground covering) should be procured from reliable sources. If shredded rubber is used, get samples prior to purchasing. Several companies are selling shredded rubber contaminated with petroleum products that may cause allergic reaction in some people. When procuring netting, ensure provider includes design specifications and usage restrictions.

f. To ensure maximum life of safety equipment, inspect on a regular interval and store away from extreme weather conditions when possible.

g. See figure C-31 for required obstacle information.

Obstacle information

Total number of obstacles: _____

Number of standard obstacles: _____

Number of nonstandard obstacles: _____

Number of modified obstacles: _____

Total injuries occurring at each obstacle course:

Remarks:

Figure C-31 Obstacle Information

Appendix D
Rappel Tower Site Inspection Criteria

D-1. Rappel tower site inspection criteria
The minimum inspection criteria for towers and other facilities utilized for military rappelling training is shown in figure D-1 and table D-1.

Name, title, organization, and phone number of inspector(s):

Date of inspection:

Name and location of tower:

Date of tower construction:

Built by:

Owned by:

Last date of any MAJOR modifications:
(If applicable, list modification, and by who performed, in addition to date; otherwise state not applicable.)

Date of previous inspection:

Name, title, and organization of previous inspector:

Is a copy of previous inspection available?

Name, title, organization, and phone number of local point of contact:

Date of last structural inspection:

Date of last anchor point load test:

Signature of inspector(s):

Figure D-1. Rappel tower site inspection information

Table D-1
Rappel tower inspection criteria checklist

	AREA	STANDARD	YES	NO	NA
1	Inspect	a. Is the tower structurally sound? Do structural support members appear serviceable, free from deterioration, breaks, or damage?.			
		b. Are there any signs of insect infestation? [29 CFR 1910.141(a)(5)]			
		c. Are bolts that connect structural members or support cables serviceable and properly connected/tightened?			
		d. Are stairs or ladders firmly attached to the tower?			
		e. Do stairs/fixed ladders comply with OSHA standards? [29 CFR 1910.24 and 29 CFR 1910.27]			
		f. Are all areas marked in yellow that pose a potential trip hazard or head hazard? [29 CFR 1910.144(a)(3)]			
		g. Are the tower platform and all rappel rope stations accessible without having to climb over any obstacles (guard rails, support cables, etc.)?			
		h. Is the tower deck free of slip/trip hazards such as water, protruding nails/bolts/splinters, loose equipment, etc? [29 CFR 1910.141(a)(3)(ii) and 29 CFR 1910.141(a)(3)(iii)]			
		i. Are the tower deck and any open areas (above 4') not actively being used for rappelling, guarded with guardrails? [29 CFR 1910.23(c)(1)]			
		j. Are all guard rails a minimum of 42" high and capable of withstanding a side force of 200 lbs? [29 CFR 1910.23(e)(1) and 29 CFR 1910.23(e)(3)(iv)]			
		k. Are toe boards or similar barriers installed in all areas where personnel could pass underneath? [29 CFR 1910.23(c)(1)]			
		l. Do all tower rope stations have primary and secondary anchor points?			
		m. Are all anchor points in serviceable condition and free of corrosion, sharp edges, burrs, or grooves that could cut or damage ropes?			
		n. Have all anchor points been designed to ensure that they will accommodate a weight of at least 5000 pounds for each Soldier attached? [29 CFR 1910.66, appendix C (I)(c)(10)]			
		o. Is the rappel wall face area free of protruding nails, bolts, or splinters?			
		p. Is the rappel wall face area free of broken, loose, decayed, or missing boards?			
		q. Is padding material in place on all edges that ropes and/or personnel cross?			
		r. Is the edge padding in good condition and securely fastened?			
		s. Is the edge padding free from protruding nails, bolts, or other fasteners that could fray or cut ropes or injure rappelers?			
		t. Are all structural areas of the tower properly padded that a rappeller might contact during rappel operations?			
		u. Is the structural padding in serviceable condition, securely fastened, and free from protruding nails, bolts, or fasteners?			
		v. Is the landing area free of obstructions and hazards?			
		w. Does the landing area extend an uninterrupted distance of 15 feet from the tower base and at least 2 feet beyond the width of the base with cushioning material in the event of a fall?			
		x. Is the landing area adequately cushioned in case of a fall (24 inches of non-compressed wood chips, mulch, or sawdust; 12 inches of commercially produced shredded rubber; or safety pads that offer similar fall protection)?			
		y. Has the cushioning material in the landing area been loosened up prior to use and, if large numbers of students are rappelling, are procedures in place and equipment available to loosen it up again during training?			

Table D-1
Rappel tower inspection criteria checklist, continued

	AREA	STANDARD	YES	NO	NA
2	Physical security and fire protection criteria	a. Is there a positive locking device on the ladder/steps or a locked fence around the tower that denies unauthorized access to the tower?			
		b. Is there a prominently displayed warning sign that discourages unauthorized use of the tower (for example, WARNING: OFF LIMITS TO UNAUTHORIZED PERSONNEL)?			
		c. Are NO SMOKING signs posted at the tower to preclude potential ignition of cushioning materials?			
3	CRM and training considera-tions	a. Is there a current risk management worksheet on file and available onsite?			
		b. Has the risk management worksheet been reviewed, approved, and signed at the appropriate level?			
		c. Is the tower within 1 hour of an advanced trauma life support facility?			
		d. Are certified combat life support or medical personnel and a dedicated medical vehicle onsite to render emergency medical aid and evacuation, if required?			
		e. Is training conducted in accordance with Training Circular 21-24 and the appropriate TSP?			
		f. Is there a current SOP available that delineates requirements for instructors, students, support personnel, and other requirements?			
		g. Are properly "certified" instructors available to conduct rappel training? (**IF NO, DO NOT CONDUCT RAPPEL TRAINING!)** Name(s): Location and date of certification:			
4	Ropes and equipment	a. Are rappel ropes serviceable and properly inspected and stored?			
		b. Are rope inspections and usage properly documented on DA Form 5752-R (Rope Log (Usage and History))?			
		c. Are snap links serviceable (no excessive rust, sharp edges, improper gate opening and closing, excessive pin movement, missing pins, etc.)?			
		d. Are properly sized, serviceable, heavy leather gloves, and protective headgear available for rappelers?			

Glossary

Section I
Abbreviations

ADSO	additional duty safety officer
AIT	advance individual training
AMC	Army Materiel Command
ANSI	American National Standards Institute
AR	Army Regulation
ARA	Army radiation authorizations
ARIMS	Army Records Information Management System
ASO	aviation safety officer
BCT	basic combat training
CDSO	collateral duty safety officer
CFR	Code of Federal Regulations
CLS	combat lifesaver
CRM	composite risk management
DA	Department of the Army
DOD	Department of Defense
DODI	Department of Defense Instruction
DVD	digital versatile disc
FM	field manual
IAW	in accordance with
IMT	initial military training
LASER	Light Amplification by Stimulated Emission of Radiation
lb	pound
MOA	memorandum of agreement
NCO	noncommissioned officer
NRC	Nuclear Regulatory Commission
OHR	operational hazard report
OPM	Office of Personnel Management
OSHA	Occupational Safety and Health Act
Pam	pamphlet
POV	privately owned vehicle
QASAS	quality assurance specialist ammunition surveillance
RAC	risk assessment code
RFR	radiofrequency radiation
RSO	radiation safety officer
SOHAC	Safety and Occupational Health Advisory Council
SOP	standing operating procedure
TB	technical bulletin
TDA	table of distribution and allowance
TRADOC	U.S. Army Training and Doctrine Command
TRiPS	Travel Risk Planning System
TSP	training support package

USACR/SC U.S. Army Combat Readiness Center/Safety Center

Section II
Terms

branch proponent
The service school that has primary responsibility for developing concepts, doctrine, tactics, training, techniques, procedures, organizational designs, and materiel requirements for a particular branch in the Army.

branch safety proponency
School commandants are the safety officers for their branch, responsible for integrating safety into the development and employment of service school products (for example, doctrine, organizations, training, materiel, leadership and education, personnel, and facilities) and monitoring safety performance of branch units and proponent materiel systems worldwide.

composite risk management (CRM)
Making trade off decisions between potential/expected loss/injury versus the mission benefit of accepting the residual risk. CRM supports the commander's overall estimate and decisionmaking process. The objective is to accomplish the mission safely by identifying and eliminating unnecessary risk.

explosives
All items of ammunition; propellants, liquid and solid; high and low yield explosives; pyrotechnics; and substances associated with the foregoing that present real and potential hazards to life or property. The term includes any device or assembly of devices that contains an explosive material. Examples are bombs, guided or unguided; water and land mines; depth charges; non-nuclear warheads; explosive-loaded projectiles; explosive components of aircrew escape systems; missile propellants; unguided missiles; pyrotechnic, illuminating, and signaling devices; and cartridge-actuated tools, such as stud drivers.

manpower and personnel integration
A comprehensive management and technical program to enhance human performance and reliability in the operation, maintenance, and use of weapon systems and equipment. Manpower and personnel integration achieves this objective by integrating the full range of human factors--engineering, manpower, personnel, training, system safety, and health hazard consideration--into the materiel development.

residual hazard
A hazard that was not eliminated by design.

residual risk
Expected loss from a residual hazard. The risk remaining after one or more cycles of risk reduction efforts.

risk
An expected loss or danger resulting from a hazard. Risk is expressed in terms of estimated severity and probability of injury or damage. Over time, uncontrolled HIGH level risks will produce high levels of loss.

risk acceptance
A formal or implied decision to accept the consequences of a risk based on a risk assessment.

risk assessment
Evaluation of expected consequences of a risk against the benefits to gain from accepting the risk.

safety assessment report
A formal, comprehensive summary of the safety data collected during the design and development of a system. It includes the hazard potential of the item; provides risk assessments; and recommends procedures or other corrective actions to reduce the exposure or consequences of these hazards.

safety awareness
A consciousness of hazards, and the knowledge to avoid them or minimize their effect. Safety awareness training gives leaders the knowledge and motivation to accomplish the mission, while not unnecessarily jeopardizing the lives of personnel or readiness of equipment. Safety awareness leads to a proactive approach that uses risk management to evaluate the risks and eliminate those with inadequate benefits.

safety lesson learned
A safety or health-related warning, based on experience, which can be applied to current and future operations and systems to prevent recurrence of the hazard.

system safety risk assessment (SSRA)
A document that comprehensively evaluates the residual risks of an operation, activity, or materiel system and documents their acceptance by the materiel developer and combat developer.

Section III
Special Abbreviations and Terms

This section contains no entries.